LOT 40
IN OR 1984/1151
LONG POINT #1 PB 5/85-89

BAECHLE JOHN & DEBBRA L
59 LONG POINT DR
FERNANDINA BEACH, FL 32034

2023

03-6N-29-00LP-0040-0000

BUILDING CHARACTERISTICS

ELEMENT	CD	CONSTRUCTION
Exterior Wall	16	WD FR STUC 100
Roof Structur	08	IRREGULAR 100
Roof Cover	03	COMP SHNGL 100
Interior Wall	05	DRYWALL 100
Interior Floo	12	HARDWOOD 70
Interior Floo	14	CARPET 30
Air Condition	03	CENTRAL 100
Heating Type	04	AIR DUCTED 100
Bedrooms		4 100
Bathrooms		5 100
Frame	02	WOOD FRAME 100
Stories	2.	2. 100
Units		0 100
Quality	05	Quality Level 05
DOR CODE	0100	SINGLE FAMILY
MAP NUM		MKT AREA 10
NEIGHBORHOOD/LOC	10007.00	

AREA TYPE	TOTAL GROSS AREA	PCT OF BASE	TOT ADJ AREA	SUBAREA MARKET VALUE
BAS	3,378	100	3,378	976,702
FGR	864	55	475	137,339
FOP	96	30	29	8,385
FSP	647	40	259	74,886
FST	98	55	54	15,614
FUS	1,458	100	1,458	421,561
UOP	40	20	8	2,313
UOP	70	20	14	4,048
UOP	102	20	20	5,783
UOP	276	20	55	15,902
TOTALS	10,202		6,702	1,937,791

MARKET ADJUSTMENTS

TYPE	MDL	EFF. AREA	TOT ADJ PTS	EFF. BASE RATE	REPL. COST NEW	AYB	EYB	ECON	FNCT		NORM	% COND
0500	12	6,702	208.1022	296.55	1,987,478	2017	2017	0	0	0	2.50	97.50

1 SFR CUST – 100% - 2018 Heated Area: 4836 HX Base Yr 2018

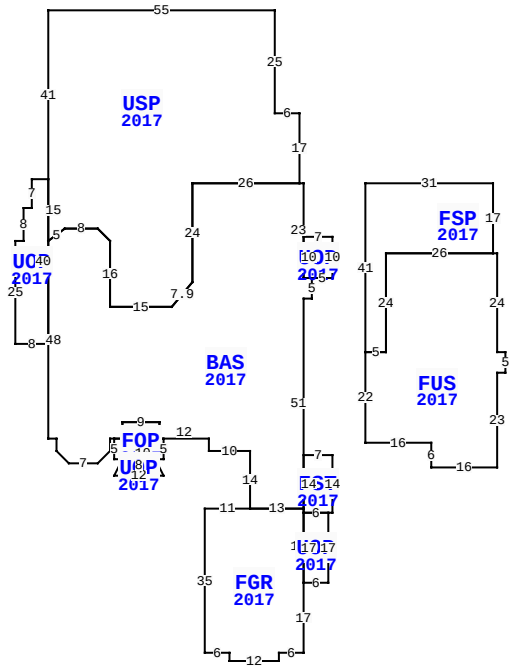

** This building has 11 Sub-Areas

59 LONG POINT DR, FERNANDINA BEACH

BLD DATE		LGL DATE	
XF DATE		LAND DATE	
INC DATE		AG DATE	

NASSAU COUNTY PROPERTY

PAGE 1 of 1 5

VALUATION SUMMARY

VALUATION BY		STANDARD
Tax Group: 5	Tax Dist:	
BUILDING MARKET VALUE		1,937,791
TOTAL MARKET OB/XF VALUE		84,427
TOTAL LAND VALUE - MARKET		600,000
TOTAL MARKET VALUE		2,622,218
SOH/AGL Deduction		903,766
ASSESSED VALUE		1,718,452
TOTAL EXEMPTION VALUE	HX HB	50,000
BASE TAXABLE VALUE		1,668,452
TOTAL JUST VALUE		2,622,218
NCON VALUE		0
INCOME VALUE		
PREVIOUS YEAR MKT VALUE		1,942,106

PERMIT NUM	DESCRIPTION	AMT	ISSUED
1704195	CO ISSUED	0	05/11/2017
B1733662	SCRNROM	0	01/12/2017
B1631650	NEW CONSTR	0	01/13/2016
B1631713	SWIM POOL	50,000	01/01/2016

SALES DATA

OFF RECORD Number	DATE	TYPE INST	Q / U	V / I	RSN CD	SALE PRICE
1984/1151	6/08/2015	WD	Q	V	02	380,000
GRANTOR: PRATT JOEL P & TERESA						
GRANTEE: BAECHLE JOHN & DEBB						
1272/0237	11/08/2004	WD	Q	V		600,000
GRANTOR: ESTES JOHN F III & DO						
GRANTEE: PRATT JOEL & TERESA						

BUILDING NOTES

BUILDING DIMENSIONS

BAS=[YR=2017] W1 USP=[YR=2017] N17 W6 N25 W55 S41 UOP=[YR=2017] W4 S7 W2 S8 W2 S25 E8 N40$ S15 U3 R4 E8 D3 R3 S16 E15 U6 R5 N24 E26$ W26 S24 D6 L5 W15 N16 U3 L3 W8 D3 L4 S48 E2 S3 D3 R3 E7 U3 R3 N3 E1 FOP=[YR=2017] S5 E2 UOP=[YR=2017] D4 L2 E12 U4 L2 W 8$ E10 N5 W1 N4 W9 S4 W2$ E2 N4 E9 S4 E12 S3 E10 S14 FGR=[YR=2017] W11 S35 E6 S2 E12 N2 E6 N17 UOP=[YR=2017] E6 N17 FST=[YR=2017] E1 N14 W7 S14 E6$ W6 S17$ N18 W13$ E13 N51 E2 N5 UOP=[YR=2017] E5 N10 W7 S10 E2$ W2 N23$ PTR=E15 FSP=[YR=2017] E31 S17 FUS=[YR=2017] E1 S24 E2 S5 W2 S23 W16 N6 W16 N22 E5 N24 E26$ W26 S24 W5 N41$ W15$.

EXTRA FEATURES

LN	OB/XF CODE	DESCRIPTION	BLD	CAP	L	W	UNITS	UT	Adj R	ADJ UNIT PRICE	ORIG COND	YEAR ON	YEAR ACTUAL	Q	% COND	OB/XF MKT VALUE	NOTES
1	0855	CONC PAVER	0	100	0	0	2,408.00	SF	7.00	7.00	100	2017	2017	3	97	16,350	
2	0861	POOL GUNIT	0	100	0	0	555.00	SF	85.00	85.00	100	2017	2017	3	87	41,042	
3	0855	CONC PAVER	0	100	0	0	2,618.00	SF	10.00	10.00	100	2017	2017	3	97	25,395	
4	0871	POOL HTR R	0	100	0	0	1.00	UT	2,000.00	2,000.00	100	2017	2017	3	82	1,640	

LAND DESCRIPTION

TOTAL OB/XF 84,427

LN	USE CODE	CLS	LAND USE DESCRIPTION	CAP	RD	LOC ZONE	FRONT	DEPTH	TOT LND UTS	UNIT TYPE	DT	DPTH FACT	% COND	TOT ADJ	UNIT PRICE	ADJ UNIT PRICE	LAND VALUE	OTHER ADJUSTMENTS AND NOTES	YEAR	DENSITY	DECL	FRZ	YR	CONSRV
1	000116	C	SFR MARSH	100		PUD	0.00	0.00	1.00	LT		1.00	1.00	1.00	600,000.00	600,000.00	600,000							

REVIEW DATE 05/25/2017 BY DJ Total Acres: 0.00 Total Land Value: 600,000 Market: 0 Agricultural: 0 Common: 600,000 PRINTED 08/02/2023 BY SYS