LOT 4
IN OR 1415/1629
LONG POINT #1 PB 5/85-89

CARDILE FRANK & BARBARA
24 LONG POINT DR
FERNANDINA BEACH, FL 32034

2023

03-6N-29-00LP-0004-0000

BUILDING CHARACTERISTICS

ELEMENT	CD	CONSTRUCTION
Exterior Wall	16	WD FR STUC 100
Roof Structur	03	GABLE/HIP 100
Roof Cover	03	COMP SHNGL 100
Interior Wall	05	DRYWALL 100
Interior Floo	13	LVT/LAMNT 60
Interior Floo	14	CARPET 40
Air Condition	03	CENTRAL 100
Heating Type	04	AIR DUCTED 100
Bedrooms		4 100
Bathrooms		4 100
Frame	02	WOOD FRAME 100
Stories	2.	2. 100
Units		0 100
Quality	04	Quality Level 04

DOR CODE	0100	SINGLE FAMILY	
MAP NUM		MKT AREA	10
NEIGHBORHOOD/LOC	10007.00		

AREA TYPE	TOTAL GROSS AREA	PCT OF BASE	TOT ADJ AREA	SUBAREA MARKET VALUE
BAS	2,847	100	2,847	465,204
BAS	555	100	555	90,688
FGR	726	55	399	65,197
FOP	113	30	34	5,556
FOP	352	30	106	17,321
FUS	559	100	559	91,341
PTO	12	5	1	164
STR	30	10	3	490
UOP	14	20	3	490
UOP	197	20	39	6,372
TOTALS	6,086		4,682	765,044

MARKET ADJUSTMENTS

TYPE	MDL	EFF. AREA	TOT ADJ PTS	EFF. BASE RATE	REPL. COST NEW	AYB	EYB	ECON	FNCT		NORM	% COND
0500	11	4,682	123.9638	176.65	827,075	2007	2007	0	0	0	7.50	92.50

1 SFR CUST - 100% - 2008 Heated Area: 3961 HX Base Yr 2008

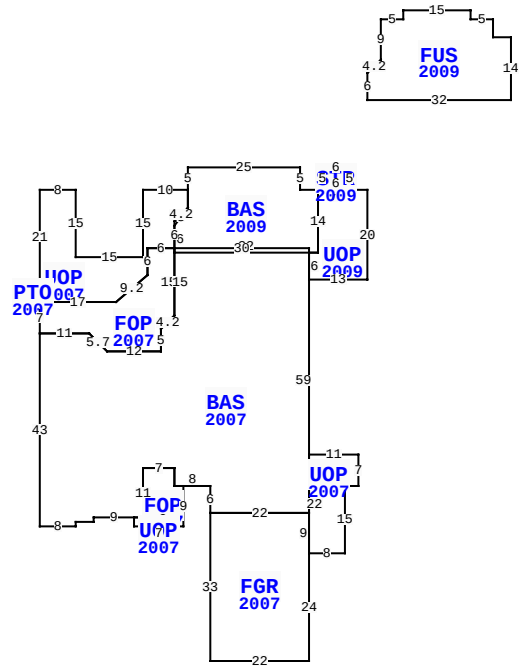

** This building has 12 Sub-Areas

24 LONG POINT DR, FERNANDINA BEACH

BLD DATE	08/10/2007 KK	LGL DATE	
XF DATE		LAND DATE	
INC DATE		AG DATE	

NASSAU COUNTY PROPERTY

PAGE 1 of 1 5

VALUATION SUMMARY

VALUATION BY		STANDARD
Tax Group: 5	Tax Dist:	
BUILDING MARKET VALUE		765,044
TOTAL MARKET OB/XF VALUE		60,979
TOTAL LAND VALUE - MARKET		650,000
TOTAL MARKET VALUE		1,476,023
SOH/AGL Deduction		599,835
ASSESSED VALUE		876,188
TOTAL EXEMPTION VALUE	HX HB	50,000
BASE TAXABLE VALUE		826,188
TOTAL JUST VALUE		1,476,023
NCON VALUE		0
INCOME VALUE		
PREVIOUS YEAR MKT VALUE		1,080,199

PERMIT NUM	DESCRIPTION	AMT	ISSUED
B1225970	WINDOWS	5,975	04/01/2012
M14448	MECH OTHER	0	04/01/2009
P13674	OTHER	0	02/01/2009
B22161	ADDITION	150,000	12/01/2008
R11700	REPAIR/RRF	3,075	12/01/2008
B19511	REMODEL	0	02/01/2007

SALES DATA

OFF RECORD Number	DATE	TYPE INST	Q / U	V / I	RSN CD	SALE PRICE
1415/1629	5/30/2006	WD	U	V	07	100
GRANTOR: BADENOCH JOSEPH J & P						
GRANTEE: CARDILE FRANK & BAR						
1396/1942	3/17/2006	WD	Q	V		649,000
GRANTOR: BADENOCH JOSEPH & PLA						
GRANTEE: CARDILE FRANK & BAR						

BUILDING NOTES

EXTRA FEATURES

LN	OB/XF CODE	DESCRIPTION	BLD	CAP	L	W	UNITS	UT	Adj R	ADJ UNIT PRICE	ORIG COND	YEAR ON	YEAR ACTUAL	Q	% COND	OB/XF MKT VALUE	NOTES
1	0855	CONC PAVER	0	100	0	0	2,670.00	SF	10.00	10.00	100	2007	2007	3	89	23,763	
2	0855	CONC PAVER	0	100	0	0	194.00	SF	10.00	10.00	100	2007	2007	3	89	1,727	
3	0861	POOL GUNIT	0	100	0	0	230.00	SF	170.00	170.00	100	2007	2007	3	52	20,332	
4	0845	KOOL DECK	0	100	0	0	640.00	SF	7.25	7.25	100	2007	2007	3	89	4,130	
5	0911	SCRN RM A	0	100	0	0	842.00	SF	17.50	17.50	100	2007	2007	3	35	5,157	
6	0500	FP-PRE FAB	0	100	0	0	1.00	UT	3,500.00	3,500.00	100	2007	2007	3	92	3,220	
7	0600	SUMMER KIT	0	100	0	0	1.00	UT	5,000.00	5,000.00	100	2007	2007	3	35	1,750	
8	0871	POOL HTR R	0	100	0	0	1.00	UT	2,000.00	2,000.00	100	2009	2009	3	45	900	

BUILDING DIMENSIONS

UOP=[YR=2009] W4 STR=[YR=2009] N5 W6 S5 E6 $ W7 BAS=[YR=2009] W4 N5 W25 S5 UOP=[YR=2007] W10 S15 W15 N15 W8 S21 PTO=[YR=2007] W3 S4 E3 N4$ S4 FOP=[YR=2007] S7 BAS=[YR=2007] S43 E8 N1 E4 N1 E9 FOP=[YR=2007] S2 E2 UOP=[YR=2007] S2 E7 N2 W7$ E9 N9 W2 N4 W7 S11 W2$ E2 N11 E7 S4 E8 S6 FGR=[YR=2007] S33 E22 N24 UOP=[YR=2007] E8 N15 E3 N7 W11 S22$ N9 W22$ E22 N59 W30 S15 D3 L3 S5 W12 U4 L4 W11$ E11 D4 R4 E12 N5 U3 R3 N15 W6 S6 D6 L7 W17$ E17 U6 R7 N6 E6 N6 R3 U3 N4$ S4 D4 L3 S6 E32 N14$ S14 W2 S6 E13 N20$ PTR=N20 FUS=[YR=2009] N6 R3 U3 N9 E5 N2 E15 S2 E5 S4 E4 S14 W32$ S20$.

LAND DESCRIPTION

TOTAL OB/XF 60,979

LN	USE CODE	CLS	LAND USE DESCRIPTION	CAP	RD	LOC ZONE	FRONT	DEPTH	TOT LND UTS	UNIT TYPE	DT	DPTH FACT	% COND	TOT ADJ	UNIT PRICE	ADJ UNIT PRICE	LAND VALUE	OTHER ADJUSTMENTS AND NOTES	YEAR	DENSITY	DECL	FRZ	YR	CONSRV
1	000140	C	SFR GOLF A	100		PUD	0.00	0.00	1.00	LT		1.00	1.00	1.00	650,000.00	650,000.00	650,000							

REVIEW DATE 05/16/2018 BY DJX Total Acres: 0.00 Total Land Value: 650,000 Market: 0 Agricultural: 0 Common: 650,000 PRINTED 08/02/2023 BY SYS