PT OF SW1/4 OF SE1/4
IN OR 2636/1335

PAGAN EDUARDO & JENNIFER
37266 POWELL ROAD
HILLIARD, FL 32046

2023

03-3N-24-0000-0006-0100

BUILDING CHARACTERISTICS

ELEMENT	CD	CONSTRUCTION
Exterior Wall	05	AVERAGE 60
Exterior Wall	25	MOD METAL 40
Roof Structur	03	GABLE/HIP 100
Roof Cover	01	MINIMUM 60
Roof Cover	03	COMP SHNGL 40
Interior Wall	05	DRYWALL 80
Interior Wall	04	PLYWOOD 20
Interior Floo	14	CARPET 70
Interior Floo	08	SHT VINYL 30
Air Condition	03	CENTRAL 100
Heating Type	04	AIR DUCTED 100
Bedrooms		3 100
Bathrooms		2 100
Frame	02	WOOD FRAME 100
Stories	1.	1. 100
Units		0 100
BUD8 Adjustme	04	DIST 01 100
Quality	03	Quality Level 03
DOR CODE	0200	MOBILE HOME
MAP NUM		MKT AREA 09
NEIGHBORHOOD/LOC	9001.00	

AREA TYPE	TOTAL GROSS AREA	PCT OF BASE	TOT ADJ AREA	SUBAREA MARKET VALUE
BAS	256	100	256	5,431
BAS	284	100	284	6,025
BAS	672	100	672	14,257
BAS	192	100	192	4,073
FOP	88	30	26	552
UCP	672	20	134	2,843
UOP	72	25	18	382
USP	80	50	40	849
USP	200	50	100	2,122
USP	80	50	40	849
TOTALS	2,706		1,822	38,656

MARKET ADJUSTMENTS

TYPE	MDL	EFF. AREA	TOT ADJ PTS	EFF. BASE RATE	REPL. COST NEW	AYB	EYB	ECON	FNCT		NORM	% COND
0820	02	1,822	108.8000	70.72	128,852	1971	1980	0	0	0	70.00	30.00

1 M/H 93- – 0% - 0 Heated Area: 1404 HX Base Yr

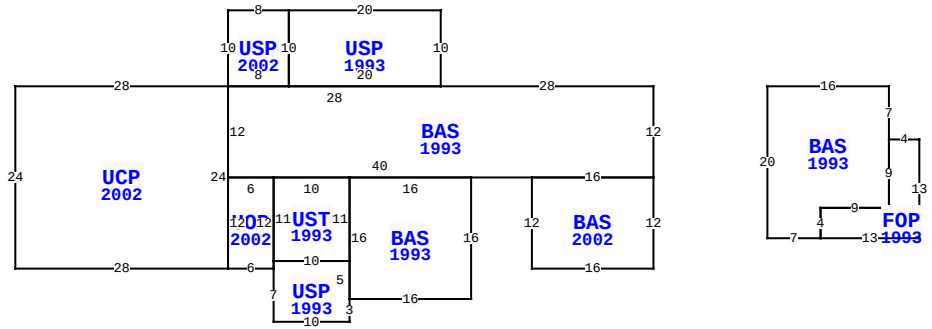

** This building has 11 Sub-Areas

37265 POWELL LN, HILLIARD

BLD DATE		LGL DATE	
XF DATE		LAND DATE	06/13/2023 MLU
INC DATE		AG DATE	

NASSAU COUNTY PROPERTY

PAGE 1 of 1 4

VALUATION SUMMARY

VALUATION BY	STANDARD
Tax Group: 4	Tax Dist:
BUILDING MARKET VALUE	38,656
TOTAL MARKET OB/XF VALUE	2,789
TOTAL LAND VALUE - MARKET	46,170
TOTAL MARKET VALUE	87,615
SOH/AGL Deduction	25,477
ASSESSED VALUE	62,138
TOTAL EXEMPTION VALUE	0
BASE TAXABLE VALUE	62,138
TOTAL JUST VALUE	87,615
NCON VALUE	0
INCOME VALUE	
PREVIOUS YEAR MKT VALUE	73,958

PERMIT NUM	DESCRIPTION	AMT	ISSUED

SALES DATA

OFF RECORD Number	DATE	TYPE INST	Q / U	V / I	RSN CD	SALE PRICE
2636/1335	5/04/2023	WD	Q	I	01	150,000
GRANTOR: SHANNON RENEE G & TER						
GRANTEE: PAGAN EDUARDO & JEN						
2636/1326	4/03/2023	QC	U	I	11	100
GRANTOR: YOUNG DOYLENE P						
GRANTEE: SHANNON RENEE G & T						

BUILDING NOTES

BUILDING DIMENSIONS

BAS=[YR=1993] W28 USP=[YR=1993] N10 W20 USP 2002= W8 S10 UCP=[YR=2002] W28 S24 E28 N24 $ E8 N10 $ S10 E20 $ W28 S12 UOP=[YR=2002] S12 E6 USP=[YR=1993] S7 E10 N3 BAS=[YR=1993] E16 N16 W16 S16 $ N5 UST=[YR=1993] N11 W10 S11 E10 $ W10 S1 $ N12 W6 $ E40 BAS=[YR=2002] S12 E16 N12 W16 $ E16 N12 $ PTR= E15 BAS=[YR=1993] E16 S7 FOP=[YR=1993] E4 S13 W13 N4 E9 N9 $ S9 W9 S4 W7 N20 $ W15 $.

EXTRA FEATURES

LN	OB/XF CODE	DESCRIPTION	BLD	CAP	L	W	UNITS	UT	Adj R	ADJ UNIT PRICE	ORIG COND	YEAR ON	YEAR ACTUAL	Q	% COND	OB/XF MKT VALUE	NOTES
3	0940	SHEDS/PORT	0	0	19	12	228.00	SF	20.10	20.10	100	1985	1985	3	20	917	
4	0940	SHEDS/PORT	0	0	20	12	240.00	SF	20.10	20.10	100	1995	1995	3	20	965	
5	0810	CONCRETE A	0	0	75	3	225.00	SF	6.50	6.50	100	1990	1990	3	62	907	

LAND DESCRIPTION

TOTAL OB/XF 2,789

LN	USE CODE	CLS	LAND USE DESCRIPTION	CAP	RD	LOC ZONE	FRONT	DEPTH	TOT LND UTS	UNIT TYPE	DT	DPTH FACT	% COND	TOT ADJ	UNIT PRICE	ADJ UNIT PRICE	LAND VALUE	OTHER ADJUSTMENTS AND NOTES	YEAR	DENSITY	DECL	FRZ	YR	CONSRV
1	000102	C	SFR/MH	0	0007	OR	0.00	0.00	1.71	AC		1.00	1.00	0.90	30,000.00	27,000.00	46,170							

REVIEW DATE 10/16/2017 BY TWX Total Acres: 1.71 Total Land Value: 46,170 Market: 0 Agricultural: 0 Common: 46,170 PRINTED 08/02/2023 BY SYS