LOT 19
IN OR 2150/839
LITTLE DUNES #4 PB 6/146

MCMAHON CHARLES M & TEDDIE E
19 LITTLE DUNES CIRCLE
FERNANDINA BEACH, FL 32034

2023

02-6N-29-DCLO-0019-0000

BUILDING CHARACTERISTICS

ELEMENT	CD	CONSTRUCTION
Exterior Wall	10	ABOVE AVG 100
Roof Structur	03	GABLE/HIP 100
Roof Cover	03	COMP SHNGL 100
Interior Wall	05	DRYWALL 100
Interior Floo	12	HARDWOOD 50
Interior Floo	14	CARPET 50
Air Condition	03	CENTRAL 100
Heating Type	04	AIR DUCTED 100
Bedrooms		3 100
Bathrooms		3 100
Frame	02	WOOD FRAME 100
Stories	2.	2. 100
Units		0 100
Quality	05	Quality Level 05

DOR CODE 0100 SINGLE FAMILY
MAP NUM | MKT AREA 10
NEIGHBORHOOD/LOC 10003.010

AREA TYPE	TOTAL GROSS AREA	PCT OF BASE	TOT ADJ AREA	SUBAREA MARKET VALUE
BAS	1,198	100	1,198	229,089
FOP	112	30	34	6,501
FSP	110	40	44	8,414
FUS	910	100	910	174,016
PTO	72	5	4	765
UCP	252	20	50	9,561
UOP	6	20	1	192
UOP	10	20	2	382
UST	12	45	5	956
UST	50	45	22	4,207
TOTALS	2,732		2,270	434,082

MARKET ADJUSTMENTS

TYPE	MDL	EFF. AREA	TOT ADJ PTS	EFF. BASE RATE	REPL. COST NEW	AYB	EYB	ECON	FNCT		NORM	% COND
0500	11	2,270	149.9400	213.66	485,008	2000	2000	0	0	0	10.50	89.50

1 SFR CUST – 100% - 2018 Heated Area: 2108 HX Base Yr 2018

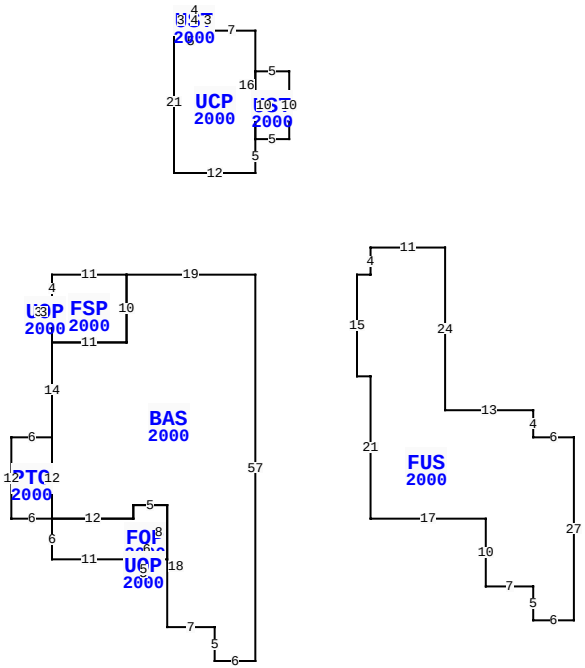

19 LITTLE DUNES CIR, FERNANDINA BEACH

BLD DATE		LGL DATE	
XF DATE		LAND DATE	
INC DATE		AG DATE	

NASSAU COUNTY PROPERTY

PAGE 1 of 1 5

VALUATION SUMMARY

VALUATION BY		STANDARD
Tax Group: 5	Tax Dist:	
BUILDING MARKET VALUE		434,082
TOTAL MARKET OB/XF VALUE		6,969
TOTAL LAND VALUE - MARKET		300,000
TOTAL MARKET VALUE		741,051
SOH/AGL Deduction		206,939
ASSESSED VALUE		534,112
TOTAL EXEMPTION VALUE	HX HB	50,000
BASE TAXABLE VALUE		484,112
TOTAL JUST VALUE		741,051
NCON VALUE		0
INCOME VALUE		
PREVIOUS YEAR MKT VALUE		627,818

PERMIT NUM	DESCRIPTION	AMT	ISSUED
B007214	CARPORT	5,000	06/01/2000
B006779	NEW CONSTR	150,000	02/01/2000

SALES DATA

OFF RECORD Number	DATE	TYPE INST	Q U	V I	RSN CD	SALE PRICE
2150/0839	10/06/2017	WD	Q	I	01	618,000
GRANTOR: HANKS ROBERT P & MARY						
GRANTEE: MCMAHON CHARLES MAR						
0924/0194	3/15/2000	WD	Q	V		74,100
GRANTOR: DUNES CLUB COMPANY II						
GRANTEE: HANKS ROBERT P & MA						

BUILDING NOTES

BUILDING DIMENSIONS

BAS=[YR=2000] W19 FSP=[YR=2000] W11 S4 UOP=[YR=2000] W2 S3 E2 N3 $ S6 E11 N10 $ S10 W11 S14 PTO=[YR=2000] W6 S12 E6 FOP=[YR=2000] S6 E11 UOP=[YR=2000] S2 E5 N2 W5 $ E6 N8 W5 S2 W12 $ N12 $ S12 E12 N2 E5 S18 E7 S5 E6 N57 $ PTR= N15 UCP=[YR=2000] N5 UST=[YR=2000] E5 N10 W5 S10 $ N16 W7 UST=[YR=2000] N3W4 S3 E4 $ W5 S21 E12 $ S15 $ PTR= E15 FUS=[YR=2000] E2 N4 E11 S24 E13 S4 E6 S27 W6 N5 W7 N10 W17 N21 W2 N15 $ W15 $.

EXTRA FEATURES

LN	OB/XF CODE	DESCRIPTION	BLD	CAP	L	W	UNITS	UT	Adj R	ADJ UNIT PRICE	ORIG COND	YEAR ON	YEAR ACTUAL	Q	% COND	OB/XF MKT VALUE	NOTES
1	0504	FP-ELECTRI	0	100	0	0	1.00	UT	2,000.00	2,000.00	100	2000	2000	3	85	1,700	
2	0810	CONCRETE A	0	100	0	0	362.00	SF	6.50	6.50	100	2000	2000	3	80	1,882	
3	0825	BRICK	0	100	0	0	239.00	SF	12.50	12.50	100	2000	2000	3	94	2,808	
4	0810	CONCRETE A	0	100	7	4	28.00	SF	6.50	6.50	100	2000	2000	3	80	146	
5	1075	TRELLIS G	0	100	6	6	36.00	SF	35.00	35.00	100	2000	2000	3	29	365	
6	0441	STK FNC 4'	0	100	0	0	52.00	LF	6.50	6.50	100	2000	2000	3	20	68	

LAND DESCRIPTION

TOTAL OB/XF 6,969

LN	USE CODE	CLS	LAND USE DESCRIPTION	CAP	RD	LOC ZONE	FRONT	DEPTH	TOT LND UTS	UNIT TYPE	DT	DPTH FACT	% COND	TOT ADJ	UNIT PRICE	ADJ UNIT PRICE	LAND VALUE	OTHER ADJUSTMENTS AND NOTES	YEAR	DENSITY	DECL	FRZ	YR	CONSRV
1	000140	C	SFR GOLF A	100			0.00	0.00	1.00	LT		1.00	1.00	1.00	300,000.00	300,000.00	300,000							

REVIEW DATE 05/04/2017 BY DJX Total Acres: 0.00 Total Land Value: 300,000 Market: 0 Agricultural: 0 Common: 300,000 PRINTED 08/02/2023 BY SYS