LOT 17
LITTLE DUNES #4 PB 6/146

**SITES PAUL S & NORA P**
470 CAMERON VALLEY CT
ATLANTA, GA 30328

**2023**

**02-6N-29-DCLO-0017-0000**

## NASSAU COUNTY PROPERTY



## BUILDING CHARACTERISTICS

| ELEMENT | CD | CONSTRUCTION |
|---|---|---|
| Exterior Wall | 10 | ABOVE AVG 100 |
| Roof Structur | 03 | GABLE/HIP 100 |
| Roof Cover | 03 | COMP SHNGL 100 |
| Interior Wall | 05 | DRYWALL 100 |
| Interior Floo | 12 | HARDWOOD 50 |
| Interior Floo | 14 | CARPET 50 |
| Air Condition | 03 | CENTRAL 100 |
| Heating Type | 04 | AIR DUCTED 100 |
| Bedrooms | | 3 100 |
| Bathrooms | | 3 100 |
| Frame | 02 | WOOD FRAME 100 |
| Stories | 2. | 2. 100 |
| Units | | 0 100 |
| Quality | 05 | Quality Level 05 |
| DOR CODE | 0100 | SINGLE FAMILY |
| MAP NUM | | MKT AREA 10 |
| NEIGHBORHOOD/LOC | 10003.010 | |

| AREA TYPE | TOTAL GROSS AREA | PCT OF BASE | TOT ADJ AREA | SUBAREA MARKET VALUE |
|---|---|---|---|---|
| BAS | 1,198 | 100 | 1,198 | 229,089 |
| FOP | 112 | 30 | 34 | 6,501 |
| FSP | 110 | 40 | 44 | 8,414 |
| FUS | 910 | 100 | 910 | 174,016 |
| PTO | 72 | 5 | 4 | 765 |
| UCP | 273 | 20 | 55 | 10,517 |
| UOP | 6 | 20 | 1 | 192 |
| UOP | 10 | 20 | 2 | 382 |
| UST | 20 | 45 | 9 | 1,721 |
| UST | 40 | 45 | 18 | 3,442 |
| TOTALS | 2,751 | | 2,275 | 435,038 |

## MARKET ADJUSTMENTS

| TYPE | MDL | EFF. AREA | TOT ADJ PTS | EFF. BASE RATE | REPL. COST NEW | AYB | EYB | ECON | FNCT | | NORM | % COND |
|---|---|---|---|---|---|---|---|---|---|---|---|---|
| 0500 | 11 | 2,275 | 149.9400 | 213.66 | 486,076 | 2000 | 2000 | 0 | 0 | 0 | 10.50 | 89.50 |

1 SFR CUST – 0% - 0 Heated Area: 2108 HX Base Yr

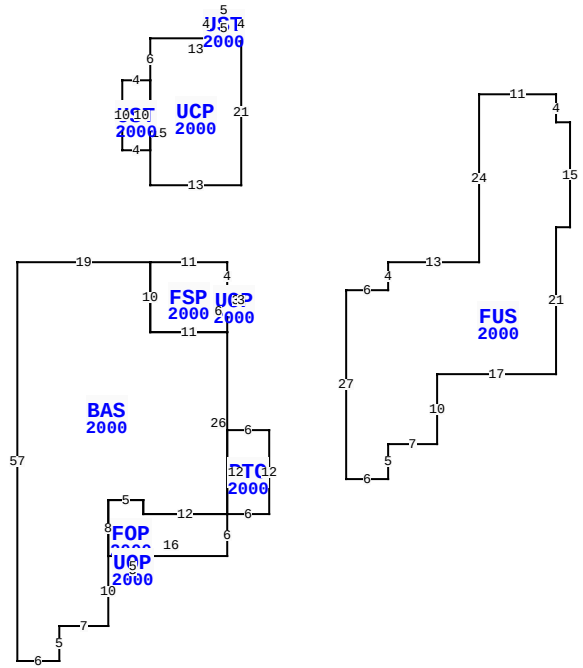


17 LITTLE DUNES CIR, FERNANDINA BEACH

| | | | |
|---|---|---|---|
| BLD DATE | | LGL DATE | |
| XF DATE | | LAND DATE | |
| INC DATE | | AG DATE | |

## VALUATION SUMMARY

| | |
|---|---|
| VALUATION BY | STANDARD |
| Tax Group: 5 | Tax Dist: |
| BUILDING MARKET VALUE | 435,038 |
| TOTAL MARKET OB/XF VALUE | 8,148 |
| TOTAL LAND VALUE - MARKET | 300,000 |
| TOTAL MARKET VALUE | 743,186 |
| SOH/AGL Deduction | 132,667 |
| ASSESSED VALUE | 610,519 |
| TOTAL EXEMPTION VALUE | 0 |
| BASE TAXABLE VALUE | 610,519 |
| TOTAL JUST VALUE | 743,186 |
| NCON VALUE | 0 |
| INCOME VALUE | |
| PREVIOUS YEAR MKT VALUE | 628,977 |

| PERMIT NUM | DESCRIPTION | AMT | ISSUED |
|---|---|---|---|
| B007215 | CARPORT | 5,000 | 06/01/2000 |
| B006776 | NEW CONSTR | 150,000 | 02/01/2000 |

## SALES DATA

| OFF RECORD Number | DATE | TYPE INST | Q U | V I | RSN CD | SALE PRICE |
|---|---|---|---|---|---|---|
| 2302/0607 | 8/23/2019 | WD | Q | I | 01 | 650,000 |
| GRANTOR: DUCHARME JAMES W & JA | | | | | | |
| GRANTEE: SITES PAUL S & NORA | | | | | | |
| 2106/0949 | 3/13/2017 | WD | Q | I | 01 | 645,000 |
| GRANTOR: MILHOUS CHRISTOPHER & | | | | | | |
| GRANTEE: DUCHARME JAMES W & | | | | | | |

## BUILDING NOTES

## BUILDING DIMENSIONS

UOP=[YR=2000] W2 FSP=[YR=2000] N4 W11 BAS=[YR=2000] W19 S57 E6 N5 E7 N10 FOP=[YR=2000] E1 UOP=[YR=2000] S2 E5 N2 W5 $ E16 N6 PTO=[YR=2000] E6 N12 W6 S12 $ W12 N2 W5 S8 $ N8 E5 S2 E12 N26 W11 N10 $ S10 E11 N6 $ S3 E2 N3 $ PTR= N15 UCP=[YR=2000] N21 UST=[YR=2000] N4 W5 S4 E5 $ W13 S6 UST=[YR=2000] W4 S10 E4 N10 $ S15 E13 $ S15 $ PTR= E15 FUS=[YR=2000] E6 N4 E13 N24 E11 S4 E2 S15 W2 S21 W17 S10 W7 S5 W6 N27 $ W15 $ .

## EXTRA FEATURES

| LN | OB/XF CODE | DESCRIPTION | BLD | CAP | L | W | UNITS | UT | Adj R | ADJ UNIT PRICE | ORIG COND | YEAR ON | YEAR ACTUAL | Q | % COND | OB/XF MKT VALUE | NOTES |
|---|---|---|---|---|---|---|---|---|---|---|---|---|---|---|---|---|---|
| 1 | 0504 | FP-ELECTRI | 0 | 0 | 0 | 0 | 1.00 | UT | 2,000.00 | 2,000.00 | 100 | 2000 | 2000 | 3 | 85 | 1,700 | |
| 2 | 0810 | CONCRETE A | 0 | 0 | 0 | 0 | 338.00 | SF | 6.50 | 6.50 | 100 | 2000 | 2000 | 3 | 80 | 1,758 | |
| 3 | 0810 | CONCRETE A | 0 | 0 | 8 | 4 | 32.00 | SF | 6.50 | 6.50 | 100 | 2000 | 2000 | 3 | 80 | 166 | |
| 4 | 0825 | BRICK | 0 | 0 | 0 | 0 | 256.00 | SF | 12.50 | 12.50 | 100 | 2000 | 2000 | 3 | 94 | 3,008 | |
| 5 | 0441 | STK FNC 4' | 0 | 0 | 0 | 0 | 66.00 | LF | 6.50 | 6.50 | 100 | 2000 | 2000 | 3 | 20 | 86 | |
| 6 | 1242 | WD DECK A | 0 | 0 | 0 | 0 | 158.00 | SF | 10.00 | 10.00 | 100 | 2000 | 2000 | 3 | 20 | 316 | |
| 7 | 0300 | BOAT DCK W | 0 | 0 | 8 | 12 | 96.00 | SF | 40.00 | 40.00 | 100 | 2000 | 2000 | 3 | 29 | 1,114 | |

## LAND DESCRIPTION

TOTAL OB/XF 8,148

| LN | USE CODE | CLS | LAND USE DESCRIPTION | CAP | RD | LOC ZONE | FRONT | DEPTH | TOT LND UTS | UNIT TYPE | DT | DPTH FACT | % COND | TOT ADJ | UNIT PRICE | ADJ UNIT PRICE | LAND VALUE | OTHER ADJUSTMENTS AND NOTES | YEAR | DENSITY | DECL | FRZ | YR | CONSRV |
|---|---|---|---|---|---|---|---|---|---|---|---|---|---|---|---|---|---|---|---|---|---|---|---|---|
| 1 | 000140 | C | SFR GOLF A | 0 | | | 0.00 | 0.00 | 1.00 | LT | | 1.00 | 1.00 | 1.00 | 300,000.00 | 300,000.00 | 300,000 | | | | | | | |

REVIEW DATE 05/04/2017 BY DJX Total Acres: 0.00 Total Land Value: 300,000 Market: 0 Agricultural: 0 Common: 300,000 PRINTED 08/02/2023 BY SYS