IN OR 1056/1528
ESMT OR 1154/1907

TOSH KENNETH W & MARCLE D
11536 THORNHILL PLACE
BRYCEVILLE, FL 32009

2023

02-1S-24-0000-0001-0090

NASSAU COUNTY PROPERTY

BUILDING CHARACTERISTICS

ELEMENT	CD	CONSTRUCTION
Exterior Wall	20	FACE BRICK 70
Exterior Wall	05	AVERAGE 30
Roof Structur	10	STEEL FRME 100
Roof Cover	03	COMP SHNGL 100
Interior Wall	05	DRYWALL 100
Interior Floo	12	HARDWOOD 70
Interior Floo	11	CLAY TILE 30
Air Condition	03	CENTRAL 100
Heating Type	04	AIR DUCTED 100
Bedrooms		3 100
Bathrooms		2 100
Frame	02	WOOD FRAME 100
Stories	2.	2. 100
Units		0 100
Occupancy	00	NONE 100
Quality	06	Quality Level 06
DOR CODE	5000	IMPROVED AG
MAP NUM		MKT AREA 08
NEIGHBORHOOD/LOC	8001.00	

AREA TYPE	TOTAL GROSS AREA	PCT OF BASE	TOT ADJ AREA	SUBAREA MARKET VALUE
BAS	1,264	100	1,264	132,934
FCP	560	25	140	14,723
FOP	440	30	132	13,882
FUS	784	100	784	82,452
UOP	64	20	13	1,368
TOTALS	3,112		2,333	245,359

MARKET ADJUSTMENTS

TYPE	MDL	EFF. AREA	TOT ADJ PTS	EFF. BASE RATE	REPL. COST NEW	AYB	EYB	ECON	FNCT		NORM	% COND
0100	01	2,333	132.4225	119.51	278,817	2004	2004	0	0	0	12.00	88.00

1 SINGLE FAM – 100% - 2005 Heated Area: 2048 HX Base Yr 2005

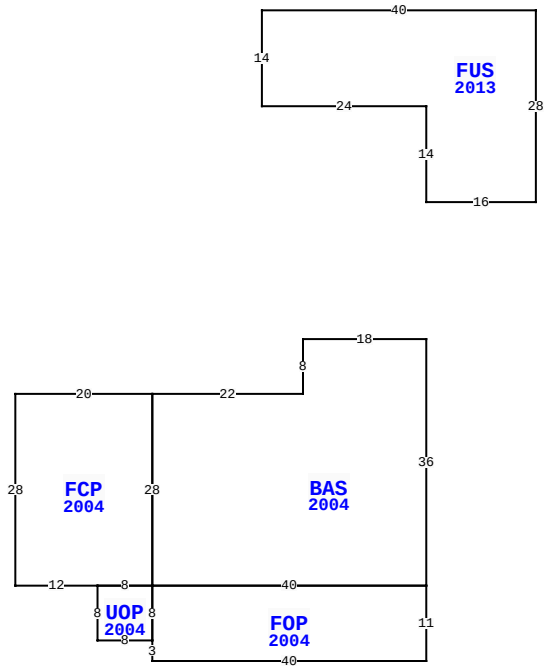

11536 THORNHILL PL, BRYCEVILLE

BLD DATE		LGL DATE	
XF DATE		LAND DATE	06/15/2023 MLU
INC DATE		AG DATE	

VALUATION SUMMARY

VALUATION BY		STANDARD
Tax Group: 6	Tax Dist:	
BUILDING MARKET VALUE		245,359
TOTAL MARKET OB/XF VALUE		32,301
TOTAL LAND VALUE - MARKET		201,000
TOTAL MARKET VALUE		310,825
SOH/AGL Deduction		138,338
ASSESSED VALUE		172,487
TOTAL EXEMPTION VALUE	HX HB	50,000
BASE TAXABLE VALUE		122,487
TOTAL JUST VALUE		478,660
NCON VALUE		0
INCOME VALUE		
PREVIOUS YEAR MKT VALUE		232,595

PERMIT NUM	DESCRIPTION	AMT	ISSUED
B0310926	NEW CONSTR	130,200	01/03/2003
B029912	GARAGE	52,800	07/01/2002

SALES DATA

OFF RECORD Number	DATE	TYPE INST	Q U	V I	RSN CD	SALE PRICE
1056/1528	5/21/2002	WD	U	V		100,000

GRANTOR: WHITE REGINALD L & AN

GRANTEE: TOSH KENNETH W & MA

BUILDING NOTES

BUILDING DIMENSIONS

BAS=[YR=2004] W18 S8 W22 FCP=[YR=2004] W20 S28 E12 UOP=[YR=2004] S8 E8 FOP=[YR=2004] S3 E40 N11 W40 S8$ N8 W8$ E8 N28$ S28 E40 N36$ PTR=N20 FUS=[YR=2013] N14 W24 N14 E40 S28 W16$ S20$.

EXTRA FEATURES

LN	OB/XF CODE	DESCRIPTION	BLD	CAP	L	W	UNITS	UT	Adj R	ADJ UNIT PRICE	ORIG COND	YEAR ON	YEAR ACTUAL	Q	% COND	OB/XF MKT VALUE	NOTES
1	0510	GARAGE WD-	0	100	40	40	1,600.00	SF	35.00	35.00	100	2002	2002	3	32	17,920	
2	0810	CONCRETE A	0	100	40	12	480.00	SF	6.50	6.50	100	2002	2002	3	83	2,590	
3	0940	SHEDS/PORT	0	100	12	10	120.00	SF	30.00	30.00	100	2006	2006	3	31	1,116	
4	0681	POLE SHED	0	100	31	28	868.00	SF	15.00	15.00	100	2008	2008	3	56	7,291	
5	0940	SHEDS/PORT	0	100	16	8	128.00	SF	30.00	30.00	100	2008	2008	3	40	1,536	
6	0681	POLE SHED	0	100	10	22	220.00	SF	15.00	15.00	100	2008	2008	3	56	1,848	

LAND DESCRIPTION

TOTAL OB/XF 32,301

LN	USE CODE	CLS	LAND USE DESCRIPTION	CAP	RD	LOC ZONE	FRONT	DEPTH	TOT LND UTS	UNIT TYPE	DT	DPTH FACT	% COND	TOT ADJ	UNIT PRICE	ADJ UNIT PRICE	LAND VALUE	OTHER ADJUSTMENTS AND NOTES	YEAR	DENSITY	DECL	FRZ	YR	CONSRV
1	005000	C	RURAL HOME	100	0007	OR	0.00	0.00	1.00	AC		1.00	1.00	1.00	30,000.00	30,000.00	30,000							
2	006000	A	PAST1/HAY	0		OR	0.00	0.00	6.00	AC		1.00	1.00	1.00	440.00	440.00	2,640							
3	005902	A	HARDWOOD SI	0			0.00	0.00	3.00	AC		1.00	1.00	1.00	175.00	175.00	525							
4	009910	M	MKT.VAL.AG	0			0.00	0.00	9.00	AC		1.00	1.00	1.00	19,000.00	19,000.00	171,000							

REVIEW DATE 03/06/2020 BY TWA Total Acres: 10.00 Total Land Value: 33,165 Market: 171,000 Agricultural: 3,165 Common: 30,000 PRINTED 08/02/2023 BY SYS