LOT 19
SWEETWATER OAKS PB 5/75 & 76

VOLKMAR NEIL J LIVING TRUST/VOLKMAR ROBIN G LIVING
8 MOSS OAKS DR
FERNANDINA BEACH, FL 32034

2023

01-6N-29-2000-0019-0000

NASSAU COUNTY PROPERTY

BUILDING CHARACTERISTICS

ELEMENT	CD	CONSTRUCTION
Exterior Wall	10	ABOVE AVG 100
Roof Structur	08	IRREGULAR 100
Roof Cover	03	COMP SHNGL 100
Interior Wall	05	DRYWALL 100
Interior Floo	12	HARDWOOD 70
Interior Floo	14	CARPET 30
Air Condition	03	CENTRAL 100
Heating Type	04	AIR DUCTED 100
Bedrooms		5 100
Bathrooms		4 100
Frame	02	WOOD FRAME 100
Stories	2.	2. 100
Units		0 100
Quality	04	Quality Level 04
DOR CODE	0100	SINGLE FAMILY
MAP NUM		MKT AREA 10
NEIGHBORHOOD/LOC	10001.00	

AREA TYPE	TOTAL GROSS AREA	PCT OF BASE	TOT ADJ AREA	SUBAREA MARKET VALUE
BAS	2,310	100	2,310	433,436
FGR	775	55	426	79,933
FOP	138	30	41	7,693
FOP	285	30	86	16,137
FOP	333	30	100	18,763
FUS	1,081	100	1,081	202,833
PTO	9	5	0	0
PTO	40	5	2	375
STR	77	10	8	1,501
TOTALS	5,048		4,054	760,671

MARKET ADJUSTMENTS

TYPE	MDL	EFF. AREA	TOT ADJ PTS	EFF. BASE RATE	REPL. COST NEW	AYB	EYB	ECON	FNCT		NORM	% COND
0500	11	4,054	133.0032	189.53	768,355	2019	2019	0	0	0	1.00	99.00

1 SFR CUST – 100% - 2022 Heated Area: 3391 HX Base Yr 2022

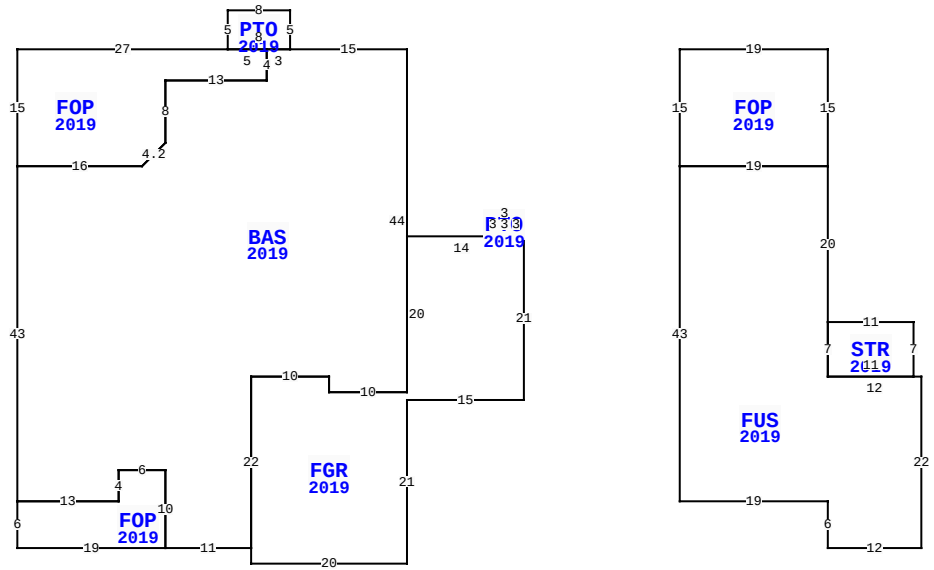

8 MOSS OAKS DR, FERNANDINA BEACH

BLD DATE		LGL DATE	
XF DATE		LAND DATE	
INC DATE		AG DATE	

VALUATION SUMMARY

VALUATION BY		STANDARD
Tax Group: 5	Tax Dist:	
BUILDING MARKET VALUE		760,671
TOTAL MARKET OB/XF VALUE		26,211
TOTAL LAND VALUE - MARKET		450,000
TOTAL MARKET VALUE		1,236,882
SOH/AGL Deduction		124,068
ASSESSED VALUE		1,112,814
TOTAL EXEMPTION VALUE	HX HB	50,000
BASE TAXABLE VALUE		1,062,814
TOTAL JUST VALUE		1,236,882
NCON VALUE		0
INCOME VALUE		
PREVIOUS YEAR MKT VALUE		1,080,402

PERMIT NUM	DESCRIPTION	AMT	ISSUED
B1800813	NEW CONSTR	447,266	01/24/2018

SALES DATA

OFF RECORD Number	DATE	TYPE INST	Q U	V I	RSN CD	SALE PRICE
2498/0687	9/21/2021	WD	Q	I	01	1,405,000
GRANTOR: PREVATTE LARRY & THER						
GRANTEE: VOLKMAR NEIL J LIVI						
2317/1958	11/07/2019	SW	Q	I	01	919,000
GRANTOR: ARTISAN HOMES LLC						
GRANTEE: PREVATTE LARRY & TH						

BUILDING NOTES

BUILDING DIMENSIONS

BAS=[YR=2019] W15 PTO=[YR=2019] N5 W8 S5 FOP=[YR=2019] W27 S15 E16 U3 R3 N8 E13 N4 W5$ E8$ W3 S4 W13 S8 D3 L3 W16 S43 FOP=[YR=2019] S6 E19 N10 W6 S4 W13$ E13 N4 E6 S10 E11FGR=[YR=2019] S2 E20 N21 E15 N21 W1 PTO=[YR=2019] N3W3S3E3$ W14 S20 W10 N2 W10 S22$ N22 E10 S2 E10 N44$ PTR=E35 FOP=[YR=2019] E19 S15 FUS=[YR=2019] S20 STR=[YR=2019] E11 S7 W11 N7$ S7 E12 S22 W12 N6 W19 N43 E19$ W19 N15$ W35$.

EXTRA FEATURES

LN	OB/XF CODE	DESCRIPTION	BLD	CAP	L	W	UNITS	UT	Adj R	ADJ UNIT PRICE	ORIG COND	YEAR ON	YEAR ACTUAL	Q	% COND	OB/XF MKT VALUE	NOTES
1	0500	FP-PRE FAB	0	100	0	0	1.00	UT	3,500.00	3,500.00	100	2019	2019	3	99	3,465	
2	0855	CONC PAVER	0	100	0	0	1,675.00	SF	10.00	10.00	100	2019	2019	3	99	16,583	
3	0855	CONC PAVER	0	100	0	0	168.00	SF	10.00	10.00	100	2019	2019	3	99	1,663	
4	0600	SUMMER KIT	0	100	0	0	1.00	UT	5,000.00	5,000.00	100	2019	2019	3	90	4,500	

LAND DESCRIPTION

TOTAL OB/XF 26,211

LN	USE CODE	CLS	LAND USE DESCRIPTION	CAP	RD	LOC ZONE	FRONT	DEPTH	TOT LND UTS	UNIT TYPE	DT	DPTH FACT	% COND	TOT ADJ	UNIT PRICE	ADJ UNIT PRICE	LAND VALUE	OTHER ADJUSTMENTS AND NOTES	YEAR	DENSITY	DECL	FRZ	YR	CONSRV
1	000100	C	SFR	100		RS-1	0.00	0.00	1.00	UT		1.00	1.00	1.00	450,000.00	450,000.00	450,000							

REVIEW DATE 07/29/2019 BY DJ Total Acres: 0.00 Total Land Value: 450,000 Market: 0 Agricultural: 0 Common: 450,000 PRINTED 08/02/2023 BY SYS