LOT 81
SEA MARSH VILLAGE UNIT 1A
PB 4/38

**BIGOSINSKI JACEK & HANNA**
41 SEA MARSH ROAD
FERNANDINA BEACH, FL 32034

**2023**

**01-6N-29-191A-0081-0000**

## NASSAU COUNTY PROPERTY



## BUILDING CHARACTERISTICS

| ELEMENT | CD | CONSTRUCTION |
|---|---|---|
| Exterior Wall | 12 | CEDAR 100 |
| Roof Structur | 08 | IRREGULAR 100 |
| Roof Cover | 03 | COMP SHNGL 100 |
| Interior Wall | 05 | DRYWALL 80 |
| Interior Wall | 08 | DECORATIVE 20 |
| Interior Floo | 14 | CARPET 80 |
| Interior Floo | 12 | HARDWOOD 20 |
| Air Condition | 03 | CENTRAL 100 |
| Heating Type | 04 | AIR DUCTED 100 |
| Bedrooms | | 3 100 |
| Bathrooms | | 3.5 100 |
| Frame | 02 | WOOD FRAME 100 |
| Stories | 2. | 2. 100 |
| Units | | 0 100 |
| BUD8 Adjustme | 05 | DIST 1A 100 |
| Occupancy | 00 | NONE 100 |
| Quality | 04 | Quality Level 04 |
| DOR CODE | 0100 | SINGLE FAMILY |
| MAP NUM | | MKT AREA 10 |
| NEIGHBORHOOD/LOC | 10001.00 | |

| AREA TYPE | TOTAL GROSS AREA | PCT OF BASE | TOT ADJ AREA | SUBAREA MARKET VALUE |
|---|---|---|---|---|
| BAS | 2,665 | 100 | 2,665 | 332,916 |
| FGR | 631 | 55 | 347 | 43,348 |
| FOP | 70 | 30 | 21 | 2,624 |
| FST | 114 | 55 | 63 | 7,870 |
| FUS | 669 | 100 | 669 | 83,573 |
| UOP | 1,716 | 20 | 343 | 42,848 |
| TOTALS | 5,865 | | 4,108 | 513,177 |

## MARKET ADJUSTMENTS

| TYPE | MDL | EFF. AREA | TOT ADJ PTS | EFF. BASE RATE | REPL. COST NEW | AYB | EYB | ECON | FNCT | | NORM | % COND |
|---|---|---|---|---|---|---|---|---|---|---|---|---|
| 0500 | 01 | 4,108 | 106.2600 | 151.42 | 622,033 | 1987 | 1987 | 0 | 0 | 0 | 17.50 | 82.50 |

1 SFR CUST - 100% - 2022 Heated Area: 3334 HX Base Yr 2022

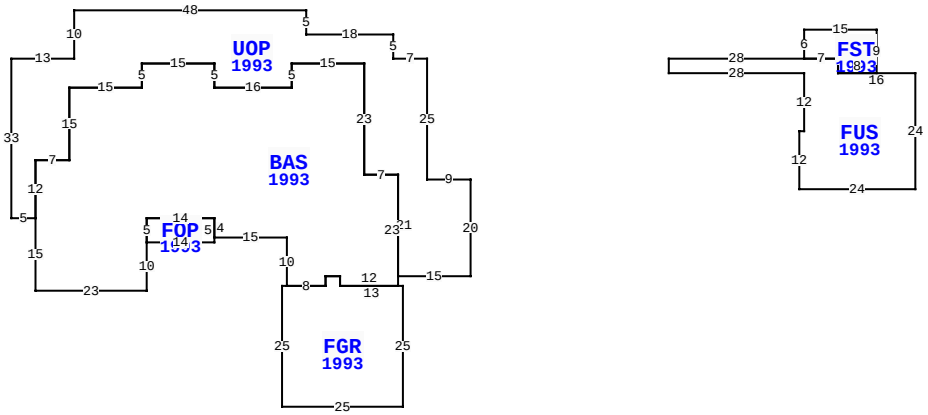


41 SEA MARSH RD, FERNANDINA BEACH

| | | | |
|---|---|---|---|
| BLD DATE | | LGL DATE | |
| XF DATE | | LAND DATE | |
| INC DATE | | AG DATE | |

## VALUATION SUMMARY

| | | |
|---|---|---|
| VALUATION BY | | STANDARD |
| Tax Group: 5 | Tax Dist: | |
| BUILDING MARKET VALUE | | 513,177 |
| TOTAL MARKET OB/XF VALUE | | 19,877 |
| TOTAL LAND VALUE - MARKET | | 600,000 |
| TOTAL MARKET VALUE | | 1,133,054 |
| SOH/AGL Deduction | | 215,649 |
| ASSESSED VALUE | | 917,405 |
| TOTAL EXEMPTION VALUE | HX HB | 50,000 |
| BASE TAXABLE VALUE | | 867,405 |
| TOTAL JUST VALUE | | 1,133,054 |
| NCON VALUE | | 0 |
| INCOME VALUE | | |
| PREVIOUS YEAR MKT VALUE | | 890,684 |

| PERMIT NUM | DESCRIPTION | AMT | ISSUED |
|---|---|---|---|
| B22185 | REMODEL | 102,000 | 01/01/2009 |
| B950400 | REPAIR/RRF | 4,800 | 10/01/1995 |
| B874198 | NEW CONSTR | 219,264 | 06/24/1987 |

## SALES DATA

| OFF RECORD Number | DATE | TYPE INST | Q U | V I | RSN CD | SALE PRICE |
|---|---|---|---|---|---|---|
| 2438/0104 | 2/26/2021 | WD | Q | I | 01 | 995,000 |
| GRANTOR: SHEPPARD DAVID R & CA | | | | | | |
| GRANTEE: BIGOSINSKI JACEK & | | | | | | |
| 1597/0406 | 12/15/2008 | WD | Q | I | | 830,000 |
| GRANTOR: LACKEY DOROTHY D & AN | | | | | | |
| GRANTEE: SHEPPARD DAVID R & | | | | | | |

## BUILDING NOTES

## BUILDING DIMENSIONS

UOP=[YR=1993] W7 N5 W18 N5 W48 S10 W13 S33 E5 BAS=[YR=1993] S15 E23 N10 FOP=[YR=1993] E14 N5 W14 S5$ N5 E14 S4 E15 S10 FGR=[YR=1993] W1 S25 E25 N25 W13 N2 W3 S2 W8$ E8 N2 E3 S2 E12 N23 W7 N23 W15 S5 W16 N5 W15 S5 W15 S15 W7 S12$ N12 E7 N15 E15 N5 E15 S5 E16 N5 E15 S23 E7 S21 E15 N20 W9 N25$ PTR=E50 FUS=[YR=1993] E28 FST=[YR=1993] N6 E15 S9 W8 N3 W7$ E7 S3 E16 S24 W24 N12 E1 N12 W28 N3$ W50$.

## EXTRA FEATURES

| LN | OB/XF CODE | DESCRIPTION | BLD | CAP | L | W | UNITS | UT | Adj R | ADJ UNIT PRICE | ORIG COND | YEAR ON | YEAR ACTUAL | Q | % COND | OB/XF MKT VALUE | NOTES |
|---|---|---|---|---|---|---|---|---|---|---|---|---|---|---|---|---|---|
| 1 | 0504 | FP-ELECTRI | 0 | 100 | 0 | 0 | 1.00 | UT | 2,000.00 | 2,000.00 | 100 | 1987 | 1987 | 3 | 64 | 1,280 | |
| 2 | 0810 | CONCRETE A | 0 | 100 | 0 | 0 | 124.00 | SF | 6.50 | 6.50 | 100 | 1987 | 1987 | 3 | 54.5 | 439 | |
| 3 | 1242 | WD DECK A | 0 | 100 | 0 | 0 | 56.00 | SF | 10.00 | 10.00 | 100 | 1987 | 1987 | 3 | 20 | 112 | |
| 4 | 0445 | BOX FNC 5' | 0 | 100 | 0 | 0 | 26.00 | LF | 8.10 | 8.10 | 100 | 1987 | 1987 | 3 | 20 | 42 | |
| 5 | 0855 | CONC PAVER | 0 | 100 | 0 | 0 | 2,638.00 | SF | 7.50 | 7.50 | 100 | 2009 | 2009 | 3 | 91 | 18,004 | |

## LAND DESCRIPTION

TOTAL OB/XF 19,877

| LN | USE CODE | CLS | LAND USE DESCRIPTION | CAP | RD | LOC ZONE | FRONT | DEPTH | TOT LND UTS | UNIT TYPE | DT | DPTH FACT | % COND | TOT ADJ | UNIT PRICE | ADJ UNIT PRICE | LAND VALUE | OTHER ADJUSTMENTS AND NOTES | YEAR | DENSITY | DECL | FRZ | YR | CONSRV |
|---|---|---|---|---|---|---|---|---|---|---|---|---|---|---|---|---|---|---|---|---|---|---|---|---|
| 1 | 000140 | C | SFR GOLF A | 100 | | RS-1 | 0.00 | 0.00 | 1.00 | LT | | 1.00 | 1.00 | 1.00 | 600,000.00 | 600,000.00 | 600,000 | | | | | | | |

REVIEW DATE 11/01/2019 BY DJA Total Acres: 0.00 Total Land Value: 600,000 Market: 0 Agricultural: 0 Common: 600,000 PRINTED 08/02/2023 BY SYS