LOT 61
IN OR 763 PG 1787
SEA MARSH VILLAGE 1 PB 4/11

NEDRELOW STEVEN J & KATHLEEN M
12 SEA MARSH RD
FERNANDINA BEACH, FL 32034

2023

01-6N-29-1900-0061-0000

BUILDING CHARACTERISTICS

ELEMENT	CD	CONSTRUCTION
Exterior Wall	16	WD FR STUC 100
Roof Structur	03	GABLE/HIP 100
Roof Cover	03	COMP SHNGL 100
Interior Wall	05	DRYWALL 100
Interior Floo	11	CLAY TILE 60
Interior Floo	09	PINE WOOD 40
Air Condition	03	CENTRAL 100
Heating Type	04	AIR DUCTED 100
Bedrooms		3 100
Bathrooms		3 100
Frame	02	WOOD FRAME 100
Stories	1.	1. 100
Units		0 100
Occupancy	00	NONE 100
Quality	05	Quality Level 05
DOR CODE	0100	SINGLE FAMILY
MAP NUM		MKT AREA 10
NEIGHBORHOOD/LOC	10001.00	

AREA TYPE	TOTAL GROSS AREA	PCT OF BASE	TOT ADJ AREA	SUBAREA MARKET VALUE
BAS	3,009	100	3,009	416,053
FGR	566	55	311	43,002
FOP	42	30	13	1,798
FOP	90	30	27	3,733
FST	194	55	107	14,795
PTO	312	5	16	2,213
UOP	36	20	7	968
TOTALS	4,249		3,490	482,560

MARKET ADJUSTMENTS

TYPE	MDL	EFF. AREA	TOT ADJ PTS	EFF. BASE RATE	REPL. COST NEW	AYB	EYB	ECON	FNCT		NORM	% COND
0500	01	3,490	114.1536	162.67	567,718	1992	1992	0	0	0	15.00	85.00

1 SFR CUST – 100% - 2013 Heated Area: 3009 HX Base Yr 2013

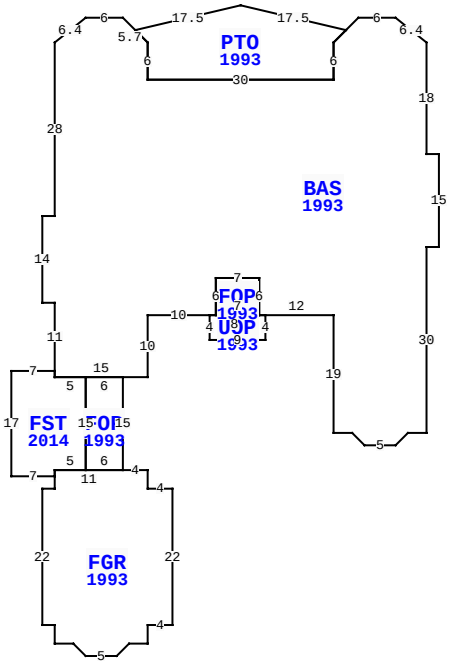

12 SEA MARSH RD, FERNANDINA BEACH

BLD DATE		LGL DATE	
XF DATE		LAND DATE	
INC DATE		AG DATE	

NASSAU COUNTY PROPERTY

PAGE 1 of 1 5

VALUATION SUMMARY

VALUATION BY		STANDARD
Tax Group: 5	Tax Dist:	
BUILDING MARKET VALUE		482,560
TOTAL MARKET OB/XF VALUE		32,695
TOTAL LAND VALUE - MARKET		750,000
TOTAL MARKET VALUE		1,265,255
SOH/AGL Deduction		268,418
ASSESSED VALUE		996,837
TOTAL EXEMPTION VALUE	HX HB	50,000
BASE TAXABLE VALUE		946,837
TOTAL JUST VALUE		1,265,255
NCON VALUE		0
INCOME VALUE		
PREVIOUS YEAR MKT VALUE		1,060,441

PERMIT NUM	DESCRIPTION	AMT	ISSUED
B1428354	274SFSTRG	11,524	02/01/2014
B0311724	REPAIR/RRF	900	09/01/2003
P961320	REMODEL	0	01/01/1996
7614	NEW CONSTR	214,466	10/17/1991

SALES DATA

OFF RECORD Number	DATE	TYPE INST	Q / U	V / I	RSN CD	SALE PRICE
0763/1787	6/26/1996	WD	Q	I		565,000
GRANTOR: CITRON THOMAS H						
GRANTEE: NEDRELOW STEVEN J &						
0630/0463	7/03/1991	WD	Q	V		200,000
GRANTOR: COGAN GENEVIEVE E						
GRANTEE: CITRON THOMAS H						

BUILDING NOTES

BUILDING DIMENSIONS

BAS=[YR=1993] W2 N18 L5 U4 W6 D2 L2 PTO=[YR=1993] U4 L17 L17 D4 D2 R2 S6 E30 N6 U2 R2 $ D2 L2 S6 W30 N6 L4 U4 W6 D4 L5 S28 W2 S14 E2 S11 FST=[YR=2014] W7 S17 E7 FGR=[YR=1993] S2 W2 S22 E2 S3 E3 D2 R2 E5 U2 R2 E3 N3 E4 N22 W4 N3 W4 FOP=[YR=1993] N15 W6 S15 E6$ W11 S1$ N1 E5 N15 W5 N1$ S1 E15 N10 E10 UOP=[YR=1993] S4 E9 N4 W1 FOP=[YR=1993] N6 W7 S6 E7$ W8$ E1 N6 E7 S6 E12 S19 E3 D2 R2 E5 U2 R2 E3N30 E2 N15 $.

EXTRA FEATURES

LN	OB/XF CODE	DESCRIPTION	BLD	CAP	L	W	UNITS	UT	Adj R	ADJ UNIT PRICE	ORIG COND	YEAR ON	YEAR ACTUAL	Q	% COND	OB/XF MKT VALUE	NOTES
1	0504	FP-ELECTRI	0	100	0	0	1.00	UT	2,000.00	2,000.00	100	1992	1992	3	74	1,480	
2	0812	CONCRETE C	0	100	0	0	2,872.00	SF	4.00	4.00	100	1992	1992	3	66	7,582	
3	0861	POOL GUNIT	0	100	0	0	868.00	SF	85.00	85.00	100	1992	1992	3	20	14,756	
4	1126	CB/STC 8"	0	100	0	0	294.00	SF	8.00	8.00	100	1992	1992	3	66	1,552	
5	0845	KOOL DECK	0	100	0	0	1,214.00	SF	7.25	7.25	100	1992	1992	3	66	5,809	
6	0855	CONC PAVER	0	100	0	0	249.00	SF	7.00	7.00	100	2005	2005	3	87	1,516	

LAND DESCRIPTION

TOTAL OB/XF 32,695

LN	USE CODE	CLS	LAND USE DESCRIPTION	CAP	RD	LOC ZONE	FRONT	DEPTH	TOT LND UTS	UNIT TYPE	DT	DPTH FACT	% COND	TOT ADJ	UNIT PRICE	ADJ UNIT PRICE	LAND VALUE	OTHER ADJUSTMENTS AND NOTES	YEAR	DENSITY	DECL	FRZ	YR	CONSRV
1	000130	C	SFR WATER	100		RS-1	0.00	0.00	1.00	LT		1.00	1.00	1.00	750,000.00	750,000.00	750,000							

REVIEW DATE 07/23/2018 BY DJ Total Acres: 0.00 Total Land Value: 750,000 Market: 0 Agricultural: 0 Common: 750,000 PRINTED 08/02/2023 BY SYS