LOT 53
IN OR 1140/1035
SEA MARSH VLG UNIT 1 PB 4/11

WALGER TERRY D
28 SEA MARSH RD
FERNANDINA BEACH, FL 32034

2023

01-6N-29-1900-0053-0000

NASSAU COUNTY PROPERTY

BUILDING CHARACTERISTICS

ELEMENT	CD	CONSTRUCTION
Exterior Wall	12	CEDAR 100
Roof Structur	03	GABLE/HIP 100
Roof Cover	03	COMP SHNGL 100
Interior Wall	05	DRYWALL 100
Interior Floo	12	HARDWOOD 100
Air Condition	03	CENTRAL 100
Heating Type	04	AIR DUCTED 100
Bedrooms		3 100
Bathrooms		4 100
Frame	02	WOOD FRAME 100
Stories	1.	1. 100
Units		0 100
BUD8 Adjustme	05	DIST 1A 100
Occupancy	00	NONE 100
Quality	04	Quality Level 04

DOR CODE	0100	SINGLE FAMILY	
MAP NUM		MKT AREA	10
NEIGHBORHOOD/LOC	10001.00		

AREA TYPE	TOTAL GROSS AREA	PCT OF BASE	TOT ADJ AREA	SUBAREA MARKET VALUE
BAS	2,776	100	2,776	337,085
BAS	264	100	264	32,057
BAS	608	100	608	73,828
DCK	80	10	8	971
FGR	484	55	266	32,300
FGR	416	55	229	27,807
FOP	124	30	37	4,493
TOTALS	4,752		4,188	508,542

MARKET ADJUSTMENTS

TYPE	MDL	EFF. AREA	TOT ADJ PTS	EFF. BASE RATE	REPL. COST NEW	AYB	EYB	ECON	FNCT		NORM	% COND
0500	01	4,188	107.1840	152.74	639,675	1973	1981	0	0	0	20.50	79.50

1 SFR CUST – 100% - 2003 Heated Area: 3648 HX Base Yr 2003

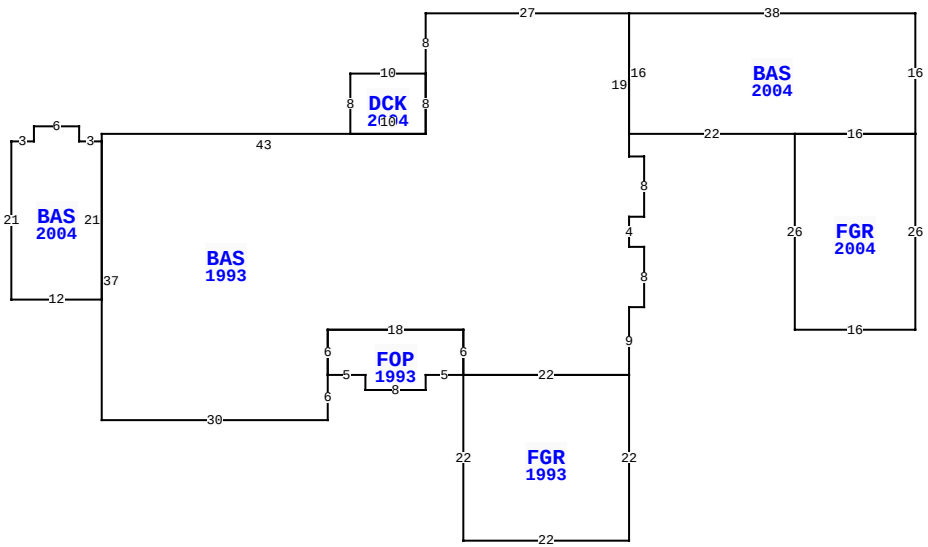

28 SEA MARSH RD, FERNANDINA BEACH

BLD DATE		LGL DATE	
XF DATE		LAND DATE	
INC DATE		AG DATE	

VALUATION SUMMARY

VALUATION BY		STANDARD
Tax Group: 5	Tax Dist:	
BUILDING MARKET VALUE		508,542
TOTAL MARKET OB/XF VALUE		9,765
TOTAL LAND VALUE - MARKET		750,000
TOTAL MARKET VALUE		1,268,307
SOH/AGL Deduction		271,540
ASSESSED VALUE		996,767
TOTAL EXEMPTION VALUE	HX HB WX	55,000
BASE TAXABLE VALUE		941,767
TOTAL JUST VALUE		1,268,307
NCON VALUE		0
INCOME VALUE		
PREVIOUS YEAR MKT VALUE		1,063,406

PERMIT NUM	DESCRIPTION	AMT	ISSUED
B0310706	ADDITION	62,436	01/01/2003

SALES DATA

OFF RECORD Number	DATE	TYPE INST	Q U /	V I /	RSN CD	SALE PRICE
1140/1035	5/28/2003	WD	U	I	01	100
GRANTOR: WALGER LOUIS M III						
GRANTEE: WALGER LOUIS M III						
1103/1329	12/27/2002	PR	U	I	01	100
GRANTOR: WALGER LOUIS M III P/						
GRANTEE: WALGER LOUIS M III						

BUILDING NOTES

BUILDING DIMENSIONS

BAS=[YR=2004] W38 BAS=[YR=1993] W27 S8 DCK=[YR=2004] W10 S8 E10 N8 $ S8 W43 S1 BAS=[YR=2004] W3 N2 W6 S2 W3 S21 E12 N21 $ S37 E30 N6 FOP=[YR=1993] E5 S2 E8 N2 E5 FGR=[YR=1993] S22 E22 N22 W22 $ N6 W18 S6 $ N6 E18 S6 E22 N9 E2 N8 W2 N4 E2 N8 W2 N19 $ S16 E22 FGR=[YR=2004] S26 E16 N26 W16 $ E16 N16 $.

EXTRA FEATURES

LN	OB/XF CODE	DESCRIPTION	BLD	CAP	L	W	UNITS	UT	Adj R	ADJ UNIT PRICE	ORIG COND	YEAR ON	YEAR ACTUAL	Q	% COND	OB/XF MKT VALUE	NOTES
1	0504	FP-ELECTRI	0	100	0	0	1.00	UT	2,000.00	2,000.00	100	1980	1980	3	49	980	
3	0812	CONCRETE C	0	100	0	0	2,156.00	SF	4.00	4.00	100	2004	2004	3	86	7,417	
4	0810	CONCRETE A	0	100	0	0	221.00	SF	6.50	6.50	100	2004	2004	3	86	1,235	
5	1242	WD DECK A	0	100	7	4	28.00	SF	10.00	10.00	100	1995	1995	3	20	56	
6	1242	WD DECK A	0	100	8	4	32.00	SF	10.00	10.00	100	2004	2004	3	24	77	

LAND DESCRIPTION

TOTAL OB/XF 9,765

LN	USE CODE	CLS	LAND USE DESCRIPTION	CAP	RD	LOC ZONE	FRONT	DEPTH	TOT LND UTS	UNIT TYPE	DT	DPTH FACT	% COND	TOT ADJ	UNIT PRICE	ADJ UNIT PRICE	LAND VALUE	OTHER ADJUSTMENTS AND NOTES	YEAR	DENSITY	DECL	FRZ	YR	CONSRV
1	000130	C	SFR WATER	100		RS-1	0.00	0.00	1.00	LT		1.00	1.00	1.00	750,000.00	750,000.00	750,000							

REVIEW DATE 02/15/2017 BY DJ Total Acres: 0.00 Total Land Value: 750,000 Market: 0 Agricultural: 0 Common: 750,000 PRINTED 08/02/2023 BY SYS