LOT 23
IN OR 2222/559
SEA MARSH VILLAGE #1 PB 4/11

HASTON HUGH B III & MARGARET C
17 RED MAPLE RD
FERNANDINA BEACH, FL 32034

2023

01-6N-29-1900-0023-0000

BUILDING CHARACTERISTICS

ELEMENT	CD	CONSTRUCTION
Exterior Wall	10	ABOVE AVG 100
Roof Structur	03	GABLE/HIP 100
Roof Cover	03	COMP SHNGL 100
Interior Wall	05	DRYWALL 100
Interior Floo	12	HARDWOOD 70
Interior Floo	15	HARDTILE 30
Air Condition	03	CENTRAL 100
Heating Type	04	AIR DUCTED 100
Bedrooms		4 100
Bathrooms		3 100
Frame	02	WOOD FRAME 100
Stories	1.	1. 100
Units		0 100
BUD8 Adjustme	05	DIST 1A 100
Quality	04	Quality Level 04
DOR CODE	0100	SINGLE FAMILY
MAP NUM		MKT AREA 10
NEIGHBORHOOD/LOC	10001.00	

AREA TYPE	TOTAL GROSS AREA	PCT OF BASE	TOT ADJ AREA	SUBAREA MARKET VALUE
BAS	2,944	100	2,944	504,595
BAS	210	100	210	35,994
FGR	570	55	314	53,819
FOP	164	30	49	8,399
STP	10	10	1	172
STP	12	10	1	172
UOP	144	20	29	4,970
UOP	1,323	20	265	45,421
TOTALS	5,377		3,813	653,541

MARKET ADJUSTMENTS

TYPE	MDL	EFF. AREA	TOT ADJ PTS	EFF. BASE RATE	REPL. COST NEW	AYB	EYB	ECON	FNCT		NORM	% COND
0500	11	3,813	135.9072	193.67	738,464	1980	1998	0	0	0	11.50	88.50

1 SFR CUST – 100% - 2019 Heated Area: 3154 HX Base Yr 2019

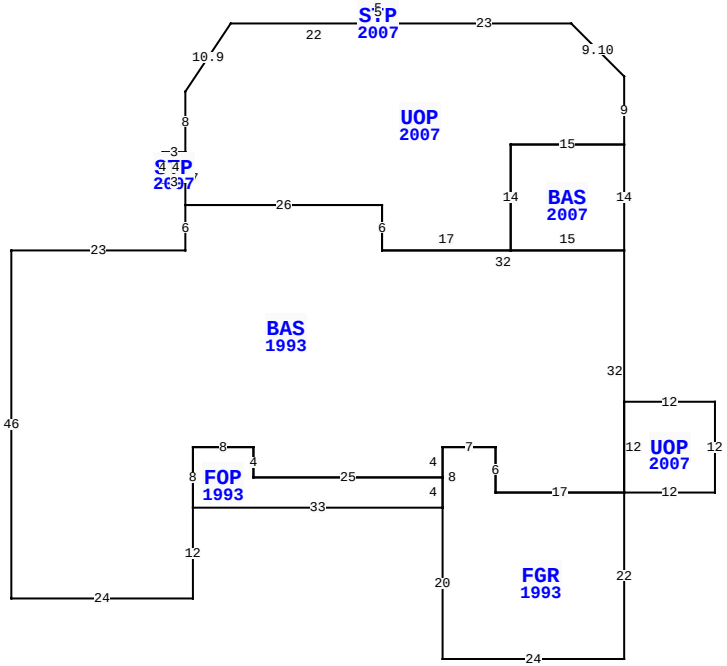

17 RED MAPLE RD, FERNANDINA BEACH

BLD DATE	02/13/2008 DJ	LGL DATE	
XF DATE		LAND DATE	
INC DATE		AG DATE	

NASSAU COUNTY PROPERTY

PAGE 1 of 1 5

VALUATION SUMMARY

VALUATION BY		STANDARD
Tax Group: 5	Tax Dist:	
BUILDING MARKET VALUE		653,541
TOTAL MARKET OB/XF VALUE		11,313
TOTAL LAND VALUE - MARKET		600,000
TOTAL MARKET VALUE		1,264,854
SOH/AGL Deduction		526,957
ASSESSED VALUE		737,897
TOTAL EXEMPTION VALUE	HX HB	50,000
BASE TAXABLE VALUE		687,897
TOTAL JUST VALUE		1,264,854
NCON VALUE		0
INCOME VALUE		
PREVIOUS YEAR MKT VALUE		891,577

PERMIT NUM	DESCRIPTION	AMT	ISSUED

SALES DATA

OFF RECORD Number	DATE	TYPE INST	Q U	V I	RSN CD	SALE PRICE
2222/0559	9/06/2018	WD	Q	I	01	925,000
GRANTOR: PILCHER GEORGE S JR &						
GRANTEE: HASTON HIGH B III &						
2092/0825	1/03/2017	WD	Q	I	02	715,000
GRANTOR: LEIMBERG STEPHEN R &						
GRANTEE: PILCHER GEORGE STAP						

BUILDING NOTES

BUILDING DIMENSIONS

UOP=[YR=2007] L7 U7 W23 STP=[YR=2007] N2 W5 S2 E5$ W22 D9 L6 S8 STP=[YR=2007] W3 S4 E3 N4$ S7 BAS=[YR=1993] S6 W23S46 E24 N12 FOP=[YR=1993] E33 FGR=[YR=1993] S20 E24 N22 W17 N6 W7 S8$ N4 W25N4 W8 S8 $ N8 E8 S4 E25 N4 E7 S6 E17 UOP=[YR=2007] E12 N12 W12 S12$ N32 BAS=[YR=2007] N14 W15 S14 E15$ W32 N6 W26$ E26 S6 E17 N14 E15 N9$.

EXTRA FEATURES

LN	OB/XF CODE	DESCRIPTION	BLD	CAP	L	W	UNITS	UT	Adj R	ADJ UNIT PRICE	ORIG COND	YEAR ON	YEAR ACTUAL	Q	% COND	OB/XF MKT VALUE	NOTES
1	0504	FP-ELECTRI	0	100	0	0	1.00	UT	2,000.00	2,000.00	100	1980	1980	3	49	980	
3	0812	CONCRETE C	0	100	0	0	2,965.00	SF	4.00	4.00	100	2000	2000	3	80	9,488	
4	0830	FLAGSTONE	0	100	22	4	88.00	SF	12.00	12.00	100	2000	2000	3	80	845	

LAND DESCRIPTION

TOTAL OB/XF 11,313

LN	USE CODE	CLS	LAND USE DESCRIPTION	CAP	RD	LOC ZONE	FRONT	DEPTH	TOT LND UTS	UNIT TYPE	DT	DPTH FACT	% COND	TOT ADJ	UNIT PRICE	ADJ UNIT PRICE	LAND VALUE	OTHER ADJUSTMENTS AND NOTES	YEAR	DENSITY	DECL	FRZ	YR	CONSRV
1	000140	C	SFR GOLF A	100		RS-1	0.00	0.00	1.00	LT		1.00	1.00	1.00	600,000.00	600,000.00	600,000							

REVIEW DATE 11/01/2019 BY DJA Total Acres: 0.00 Total Land Value: 600,000 Market: 0 Agricultural: 0 Common: 600,000 PRINTED 08/02/2023 BY SYS