LOT 17
IN OR 2043/946
SEA MARSH VILLAGE 1 PB 4/11

BOCK PATRICIA S
11 WILLOW POND ROAD
FERNANDINA BEACH, FL 32034

2023

01-6N-29-1900-0017-0000

BUILDING CHARACTERISTICS

ELEMENT	CD	CONSTRUCTION
Exterior Wall	12	CEDAR 60
Exterior Wall	16	WD FR STUC 40
Roof Structur	08	IRREGULAR 100
Roof Cover	03	COMP SHNGL 100
Interior Wall	05	DRYWALL 100
Interior Floo	14	CARPET 80
Interior Floo	12	HARDWOOD 20
Air Condition	03	CENTRAL 100
Heating Type	04	AIR DUCTED 100
Bedrooms		3 100
Bathrooms		3 100
Frame	02	WOOD FRAME 100
Stories	2.	2. 100
Units		0 100
BUD8 Adjustme	05	DIST 1A 100
Quality	05	Quality Level 05
DOR CODE	0100	SINGLE FAMILY
MAP NUM		MKT AREA 10
NEIGHBORHOOD/LOC	10001.00	

AREA TYPE	TOTAL GROSS AREA	PCT OF BASE	TOT ADJ AREA	SUBAREA MARKET VALUE
BAS	431	100	431	75,848
BAS	518	100	518	91,158
BAS	1,612	100	1,612	283,679
BAS	108	100	108	19,006
BAS	180	100	180	31,677
DCK	78	10	8	1,408
DCK	112	10	11	1,936
DCK	281	10	28	4,927
DCK	108	10	11	1,936
FGR	646	55	355	62,473
TOTALS	4,338		3,307	581,966

MARKET ADJUSTMENTS

TYPE	MDL	EFF. AREA	TOT ADJ PTS	EFF. BASE RATE	REPL. COST NEW	AYB	EYB	ECON	FNCT		NORM	% COND
0500	11	3,307	141.1354	201.12	665,104	1977	1997	0	0	0	12.50	87.50

1 SFR CUST – 100% - 2017 Heated Area: 2849 HX Base Yr 2017

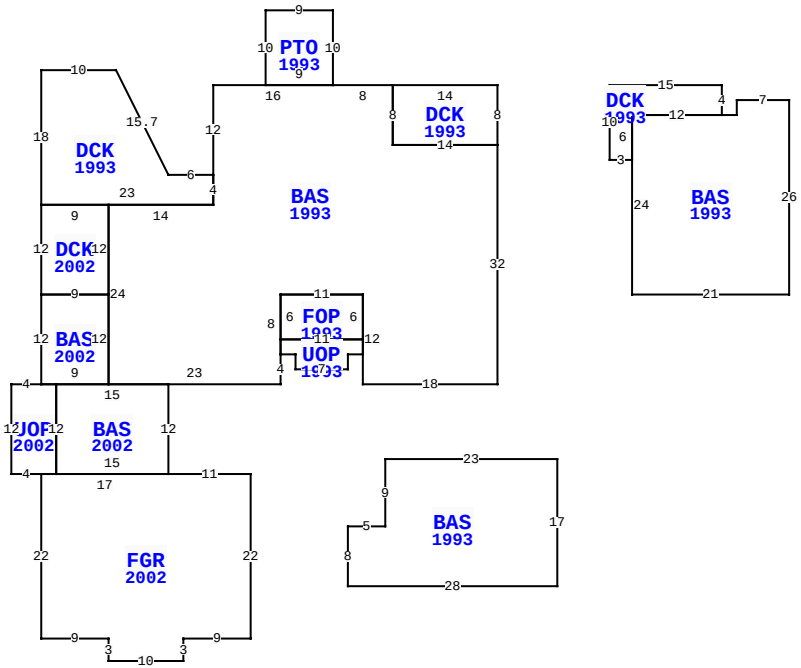

** This building has 14 Sub-Areas

11 WILLOW POND RD, FERNANDINA BEACH

BLD DATE		LGL DATE	
XF DATE		LAND DATE	
INC DATE		AG DATE	

NASSAU COUNTY PROPERTY

PAGE 1 of 1 5

VALUATION SUMMARY

VALUATION BY		STANDARD
Tax Group: 5	Tax Dist:	
BUILDING MARKET VALUE		581,966
TOTAL MARKET OB/XF VALUE		15,266
TOTAL LAND VALUE - MARKET		600,000
TOTAL MARKET VALUE		1,197,232
SOH/AGL Deduction		506,115
ASSESSED VALUE		691,117
TOTAL EXEMPTION VALUE	HX HB	50,000
BASE TAXABLE VALUE		641,117
TOTAL JUST VALUE		1,197,232
NCON VALUE		0
INCOME VALUE		
PREVIOUS YEAR MKT VALUE		841,041

PERMIT NUM	DESCRIPTION	AMT	ISSUED
P025484	REMODEL	0	04/01/2002
R023804	REPAIR/RRF	2,000	01/01/2002
8191	REPAIR/RRF	7,800	06/22/1992

SALES DATA

OFF RECORD Number	DATE	TYPE INST	Q U	V I	RSN CD	SALE PRICE
2043/0946	4/29/2016	WD	Q	I	01	775,000
GRANTOR: MICHAS JOAN S						
GRANTEE: BOOK PATRICIA S						
1428/0693	7/17/2006	WD	Q	I		815,000
GRANTOR: BITTEKER DENNIS J						
GRANTEE: MICHAS JOAN S						

BUILDING NOTES

BUILDING DIMENSIONS

DCK=[YR=1993] W14 BAS=[YR=1993] W8 PTO=[YR=1993] N10 W9 S10 E9 $ W16 S12DCK=[YR=1993] W6 U14 L7 W10 S18 DCK=[YR=2002] S12 BAS=[YR=2002] S12 UOP=[YR=2002] W4 S12 E4 FGR=[YR=2002] S22 E9 S3 E10 N3 E9 N22 W11 BAS=[YR=2002] N12 W15 S12 E15 $ W17 $ E2 N12 W2 $ E9 N12 W9 $ E9 N12 W9 $ E23 N4 $ S4 W14 S24 E23 N4 UOP=[YR=1993] E2 S2 E7 N2 E2 N2 FOP=[YR=1993] N6 W11 S6 E11 $ W11 S2 $ N8 E11 S12 E18 N32 W14 N8 $ S8 E14 N8 $ PTR= E15 DCK=[YR=1993] E15 S4 BAS=[YR=1993] E2 N2 E7 S26 W21 N24 E12 $ W12 S6 W3 N10 $ W15 $ PTR=W15S50 BAS=[YR=1993] E23 S17 W28 N8 E5 N9$ N50E15$.

EXTRA FEATURES

L N	OB/XF CODE	DESCRIPTION	BLD	CAP	L	W	UNITS	UT	Adj R	ADJ UNIT PRICE	ORIG COND	YEAR ON	YEAR ACTUAL	Q	% COND	OB/XF MKT VALUE	NOTES
1	0504	FP-ELECTRI	0	100	0	0	1.00	UT	2,000.00	2,000.00	100	1977	1977	3	42	840	
3	0855	CONC PAVER	0	100	0	0	112.00	SF	7.00	7.00	100	2011	2011	3	93	729	
4	0855	CONC PAVER	0	100	0	0	2,002.00	SF	7.00	7.00	100	2011	2011	3	93	13,033	
5	0445	BOX FNC 5'	0	100	0	0	22.00	LF	8.10	8.10	100	2002	2002	3	21	37	
6	1075	TRELLIS G	0	100	8	7	56.00	SF	35.00	35.00	100	2002	2002	3	32	627	

LAND DESCRIPTION

TOTAL OB/XF 15,266

L N	USE CODE	CLS	LAND USE DESCRIPTION	CAP	R D	LOC ZONE	FRONT	DEPTH	TOT LND UTS	UNIT TYPE	D T	DPTH FACT	% COND	TOT ADJ	UNIT PRICE	ADJ UNIT PRICE	LAND VALUE	OTHER ADJUSTMENTS AND NOTES	YEAR	DENSITY	DECL	FRZ	YR	CONSRV
1	000140	C	SFR GOLF A	100		RS-1	0.00	0.00	1.00	LT		1.00	1.00	1.00	600,000.00	600,000.00	600,000							

REVIEW DATE 04/24/2020 BY DJA Total Acres: 0.00 Total Land Value: 600,000 Market: 0 Agricultural: 0 Common: 600,000 PRINTED 08/02/2023 BY SYS