LOT 4
IN OR 1845/377
SEA MARSH VILLAGE 1 PB 4/11

RANDALL ROBERT Q & CATHERINE H TRUST/RANDALL ROBER
4 RED MAPLE RD
FERNANDINA BEACH, FL 32034

2023

01-6N-29-1900-0004-0000

BUILDING CHARACTERISTICS

ELEMENT	CD	CONSTRUCTION
Exterior Wall	16	WD FR STUC 100
Roof Structur	03	GABLE/HIP 100
Roof Cover	03	COMP SHNGL 100
Interior Wall	05	DRYWALL 100
Interior Floo	14	CARPET 70
Interior Floo	12	HARDWOOD 30
Air Condition	03	CENTRAL 100
Heating Type	04	AIR DUCTED 100
Bedrooms		3 100
Bathrooms		3 100
Frame	02	WOOD FRAME 100
Stories	1.	1. 100
Units		0 100
Occupancy	00	NONE 100
Quality	06	Quality Level 06
DOR CODE	0100	SINGLE FAMILY
MAP NUM		MKT AREA 10
NEIGHBORHOOD/LOC	10001.00	

AREA TYPE	TOTAL GROSS AREA	PCT OF BASE	TOT ADJ AREA	SUBAREA MARKET VALUE
BAS	2,146	100	2,146	329,376
BAS	40	100	40	6,139
BAS	117	100	117	17,958
DCK	256	10	26	3,991
FGR	568	55	312	47,887
FOP	54	30	16	2,456
FST	30	55	16	2,456
STP	16	10	2	307
STP	18	10	2	307
TOTALS	3,245		2,677	410,876

MARKET ADJUSTMENTS

TYPE	MDL	EFF. AREA	TOT ADJ PTS	EFF. BASE RATE	REPL. COST NEW	AYB	EYB	ECON	FNCT		NORM	% COND
0500	01	2,677	123.0960	175.41	469,573	1992	1997	0	0	0	12.50	87.50

1 SFR CUST – 0% - 0 Heated Area: 2303 HX Base Yr

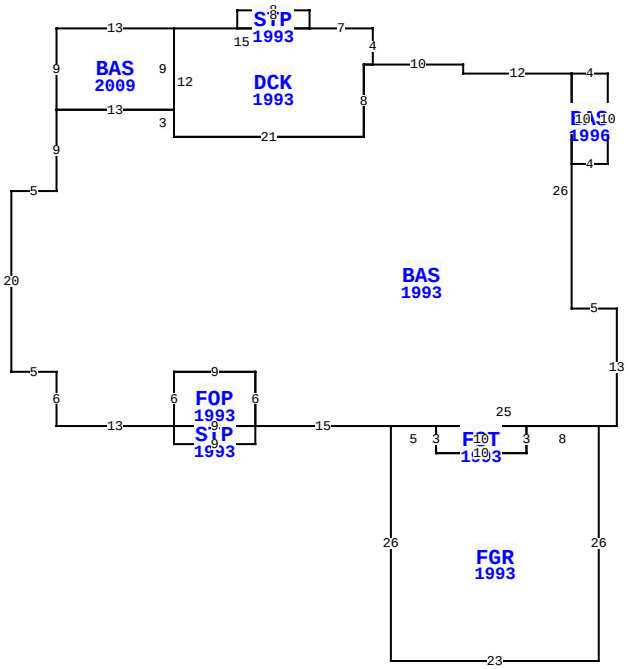

4 RED MAPLE RD, FERNANDINA BEACH

BLD DATE		LGL DATE	
XF DATE		LAND DATE	
INC DATE		AG DATE	

NASSAU COUNTY PROPERTY

PAGE 1 of 1 5

VALUATION SUMMARY

VALUATION BY	STANDARD
Tax Group: 5	Tax Dist:
BUILDING MARKET VALUE	410,876
TOTAL MARKET OB/XF VALUE	8,186
TOTAL LAND VALUE - MARKET	450,000
TOTAL MARKET VALUE	869,062
SOH/AGL Deduction	196,905
ASSESSED VALUE	672,157
TOTAL EXEMPTION VALUE	0
BASE TAXABLE VALUE	672,157
TOTAL JUST VALUE	869,062
NCON VALUE	0
INCOME VALUE	
PREVIOUS YEAR MKT VALUE	760,870

PERMIT NUM	DESCRIPTION	AMT	ISSUED
B9603125	REMODEL	15,000	07/01/1996
7749	NEW CONSTR	167,420	01/03/1992

SALES DATA

OFF RECORD Number	DATE	TYPE INST	Q U	V I	RSN CD	SALE PRICE
1845/0377	3/13/2013	WD	Q	I	02	435,000
GRANTOR: ALBERTINE LOIS						
GRANTEE: RANDALL ROBERT Q &						
0641/0544	11/18/1991	WD	Q	V		50,800
GRANTOR: BUCHANAN CLAYTON II						
GRANTEE: ALBERTINE HERMAN &						

BUILDING NOTES

BUILDING DIMENSIONS

BAS=[YR=1996] W4 BAS=[YR=1993] W12 N1 W10 DCK=[YR=1993] N4 W7 STP=[YR=1993] N2W8S2E8 $ W15 BAS=[YR=2009] W13S9E13N9$ S12 E21 N8 E1 $W1 S8 W21 N3 W13 S9 W5 S20 E5 S6 E13 STP=[YR=1993] S2E9 N2 FOP=[YR=1993] N6W9 S6 E9 $ W9$ N6 E9 S6 E15 FGR=[YR=1993] S26 E23 N26 W8 FST=[YR=1993] S3 W10 N3 E10 $ S3 W10 N3 W5 $ E25 N13W5 N26 $ S10 E4 N10 $.

EXTRA FEATURES

LN	OB/XF CODE	DESCRIPTION	BLD	CAP	L	W	UNITS	UT	Adj R	ADJ UNIT PRICE	ORIG COND	YEAR ON	YEAR ACTUAL	Q	% COND	OB/XF MKT VALUE	NOTES
1	0504	FP-ELECTRI	0	0	0	0	1.00	UT	2,000.00	2,000.00	100	1992	1992	3	74	1,480	
2	0812	CONCRETE C	0	0	0	0	2,290.00	SF	4.00	4.00	100	1992	1992	3	66	6,046	
3	1126	CB/STC 8"	0	0	25	5	125.00	SF	8.00	8.00	100	1992	1992	3	66	660	

LAND DESCRIPTION

TOTAL OB/XF 8,186

LN	USE CODE	CLS	LAND USE DESCRIPTION	CAP	RD	LOC ZONE	FRONT	DEPTH	TOT LND UTS	UNIT TYPE	DT	DPTH FACT	% COND	TOT ADJ	UNIT PRICE	ADJ UNIT PRICE	LAND VALUE	OTHER ADJUSTMENTS AND NOTES	YEAR	DENSITY	DECL	FRZ	YR	CONSRV
1	000100	C	SFR	0		RS-1	0.00	0.00	1.00	LT		1.00	1.00	1.00	450,000.00	450,000.00	450,000							

REVIEW DATE 04/24/2020 BY DJA Total Acres: 0.00 Total Land Value: 450,000 Market: 0 Agricultural: 0 Common: 450,000 PRINTED 08/02/2023 BY SYS