LOT 163
IN OR 1857/1953
MARSH CREEK VILLAGE UNIT 2-A

HEIMBOUCH MARK L
2363 GRANDIN ROAD
CINCINNATI, OH 45208

2023

01-6N-29-132A-0163-0000

NASSAU COUNTY PROPERTY

BUILDING CHARACTERISTICS

ELEMENT	CD	CONSTRUCTION
Exterior Wall	10	ABOVE AVG 70
Exterior Wall	12	CEDAR 30
Roof Structur	08	IRREGULAR 100
Roof Cover	03	COMP SHNGL 100
Interior Wall	05	DRYWALL 90
Interior Wall	06	CUST PANEL 10
Interior Floo	15	HARDTILE 70
Interior Floo	14	CARPET 30
Air Condition	03	CENTRAL 100
Heating Type	04	AIR DUCTED 100
Bedrooms		3 100
Bathrooms		3.5 100
Frame	02	WOOD FRAME 100
Stories	2.	2. 100
Units		0 100
BUD8 Adjustme	05	DIST 1A 100
Quality	06	Quality Level 06
DOR CODE	0100	SINGLE FAMILY
MAP NUM		MKT AREA 10
NEIGHBORHOOD/LOC	10001.00	

AREA TYPE	TOTAL GROSS AREA	PCT OF BASE	TOT ADJ AREA	SUBAREA MARKET VALUE
BAL	104	15	16	3,008
BAS	2,599	100	2,599	488,607
BAS	299	100	299	56,211
BAS	497	100	497	93,436
FGR	702	55	386	72,568
FGR	182	55	100	18,800
FOP	45	30	14	2,632
FOP	48	30	14	2,632
FOP	90	30	27	5,076
FOP	434	30	130	24,440
TOTALS	5,852		4,764	895,624

MARKET ADJUSTMENTS

TYPE	MDL	EFF. AREA	TOT ADJ PTS	EFF. BASE RATE	REPL. COST NEW	AYB	EYB	ECON	FNCT		NORM	% COND
0500	11	4,764	144.4207	205.80	980,431	1984	2004	0	0	0	8.65	91.35

1 SFR CUST – 0% - 0 Heated Area: 4049 HX Base Yr

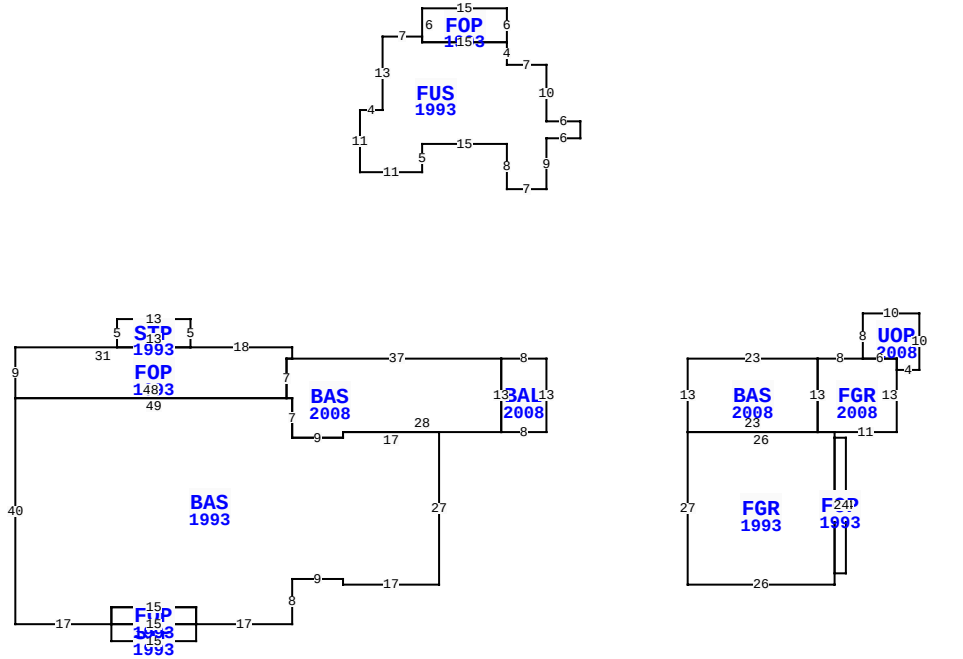

** This building has 14 Sub-Areas

102 SNOWY EGRET, FERNANDINA BEACH

BLD DATE		LGL DATE	
XF DATE		LAND DATE	
INC DATE		AG DATE	

VALUATION SUMMARY

VALUATION BY	STANDARD
Tax Group: 5	Tax Dist:
BUILDING MARKET VALUE	895,624
TOTAL MARKET OB/XF VALUE	10,451
TOTAL LAND VALUE - MARKET	600,000
TOTAL MARKET VALUE	1,506,075
SOH/AGL Deduction	182,453
ASSESSED VALUE	1,323,622
TOTAL EXEMPTION VALUE	0
BASE TAXABLE VALUE	1,323,622
TOTAL JUST VALUE	1,506,075
NCON VALUE	0
INCOME VALUE	
PREVIOUS YEAR MKT VALUE	1,203,293

PERMIT NUM	DESCRIPTION	AMT	ISSUED
B1531529	REMODEL	0	12/09/2016
M13432	MECH OTHER	0	11/01/2007
P12831	OTHER	0	11/01/2007
R10213	REPAIR/RRF	5,000	03/01/2007
B19650	ADDITION	55,902	03/01/2007
B0311312	REPAIR/RRF	2,100	06/01/2003

SALES DATA

OFF RECORD Number	DATE	TYPE INST	Q / U	V / I	RSN CD	SALE PRICE
1857/1953	5/21/2013	WD	U	I	31	1,250,000
GRANTOR: SWINSON JOHN T & STAC						
GRANTEE: HEIMBOUCH MARK L						
1306/0777	4/01/2005	WD	Q	I		1,200,000
GRANTOR: JACK WILLIAM I						
GRANTEE: SWINSON JOHN T & ST						

BUILDING NOTES

BUILDING DIMENSIONS

BAL=[YR=2008] W8 BAS=[YR=2008] W37 FOP=[YR=1993] N2 W18 STP=[YR=1993] N5 W13 S5 E13$ W31 S9 BAS=[YR=1993] S40 E17 STP=[YR=1993] S3 E15 N3 W15$ FOP=[YR=1993] E15 N3 W15 S3$ N3 E15 S3 E17 N8 E9 S1 E17 N27 W17 S1 W9 N7 W49$ E48 N7 E1$ W1 S7 E1 S7 E9 N1 E28 N13$ S13 E8 N13$ PTR= E25 BAS=[YR=2008] E23 FGR=[YR=2008] E8 UOP=[YR=2008] N8 E10 S10 W4 N2 W6 $ E6 S13 W11 FGR=[YR=1993] S1 FOP=[YR=1993] E2 S24 W2 N24$ S26 W26 N27 E26$ W3 N13$ S13 W23 N13$ W25$ PTR= N30 FUS=[YR=1993] N9 E6 N3 W6 N10 W7 N4 FOP=[YR=1993] N6 W15 S6 E15 $ W15 N1 W7 S13 W4 S11 E11 N5 E15 S8 E7 $ S30 $.

EXTRA FEATURES

LN	OB/XF CODE	DESCRIPTION	BLD	CAP	L	W	UNITS	UT	Adj R	ADJ UNIT PRICE	ORIG COND	YEAR ON	YEAR ACTUAL	Q	% COND	OB/XF MKT VALUE	NOTES
1	0504	FP-ELECTRI	0	0	0	0	2.00	UT	2,000.00	2,000.00	100	1984	1984	3	58	2,320	
2	0812	CONCRETE C	0	0	0	0	2,268.00	SF	4.00	4.00	100	1984	1984	3	47	4,264	
3	0825	BRICK	0	0	0	0	328.00	SF	12.50	12.50	100	1984	1984	3	81	3,321	
4	1100	VAC SYSTEM	0	0	0	0	1.00	UT	800.00	800.00	100	1984	1984	3	20	160	
5	0810	CONCRETE A	0	0	11	6	66.00	SF	6.50	6.50	100	2008	2008	3	90	386	

LAND DESCRIPTION

TOTAL OB/XF 10,451

LN	USE CODE	CLS	LAND USE DESCRIPTION	CAP	RD	LOC ZONE	FRONT	DEPTH	TOT LND UTS	UNIT TYPE	DT	DPTH FACT	% COND	TOT ADJ	UNIT PRICE	ADJ UNIT PRICE	LAND VALUE	OTHER ADJUSTMENTS AND NOTES	YEAR	DENSITY	DECL	FRZ	YR	CONSRV
1	000140	C	SFR GOLF A	0		RS-1	0.00	0.00	1.00	LT		1.00	1.00	1.00	600,000.00	600,000.00	600,000							

REVIEW DATE 03/03/2016 BY DJ Total Acres: 0.00 Total Land Value: 600,000 Market: 0 Agricultural: 0 Common: 600,000 PRINTED 08/02/2023 BY SYS