LOT 147
MARSH CREEK VLG 2 PB 4/21 & 22

TRIBUZIO DOMINIQUE V & EDWARD
91 OYSTER CATCHER RD
FERNANDINA BEACH, FL 32034

2023

01-6N-29-1320-0147-0000

BUILDING CHARACTERISTICS

ELEMENT	CD	CONSTRUCTION
Exterior Wall	10	ABOVE AVG 100
Roof Structur	03	GABLE/HIP 100
Roof Cover	03	COMP SHNGL 100
Interior Wall	05	DRYWALL 100
Interior Floo	14	CARPET 70
Interior Floo	11	CLAY TILE 30
Air Condition	03	CENTRAL 100
Heating Type	04	AIR DUCTED 100
Bedrooms		2 100
Bathrooms		2.5 100
Frame	02	WOOD FRAME 100
Stories	1.	1. 100
Units		0 100
BUD8 Adjustme	05	DIST 1A 100
Occupancy	00	NONE 100
Quality	04	Quality Level 04
DOR CODE	0100	SINGLE FAMILY
MAP NUM		MKT AREA 10
NEIGHBORHOOD/LOC	10001.00	

AREA TYPE	TOTAL GROSS AREA	PCT OF BASE	TOT ADJ AREA	SUBAREA MARKET VALUE
BAS	2,084	100	2,084	288,066
DCK	80	10	8	1,106
DCK	298	10	30	4,147
FGR	576	55	317	43,818
FOP	66	30	20	2,765
FST	96	55	53	7,326
SFB	216	80	173	23,913
TOTALS	3,416		2,685	371,142

MARKET ADJUSTMENTS

TYPE	MDL	EFF. AREA	TOT ADJ PTS	EFF. BASE RATE	REPL. COST NEW	AYB	EYB	ECON	FNCT		NORM	% COND
0500	01	2,685	112.7952	160.73	431,560	1983	1993	0	0	0	14.00	86.00

1 SFR CUST – 0% - 0 Heated Area: 2257 HX Base Yr

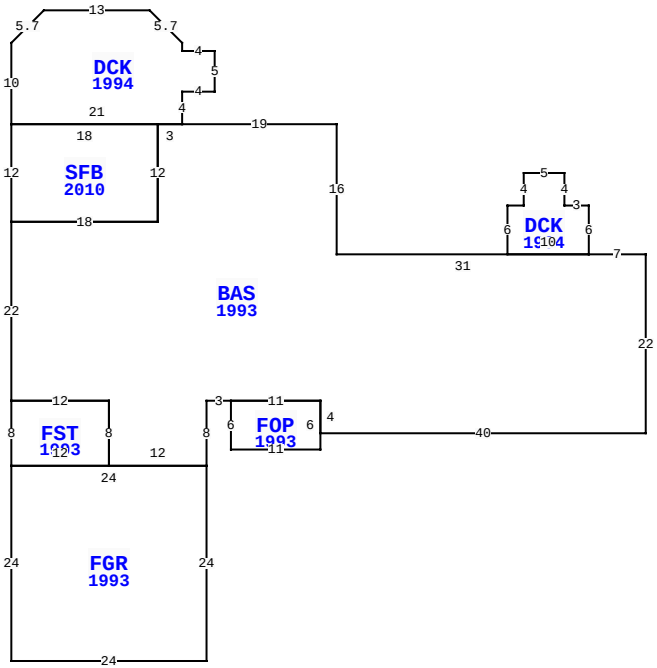

91 OYSTER CATCHER CT, FERNANDINA BEACH

BLD DATE		LGL DATE	
XF DATE		LAND DATE	
INC DATE		AG DATE	

NASSAU COUNTY PROPERTY

PAGE 1 of 1 5

VALUATION SUMMARY

VALUATION BY	STANDARD
Tax Group: 5	Tax Dist:
BUILDING MARKET VALUE	371,142
TOTAL MARKET OB/XF VALUE	5,647
TOTAL LAND VALUE - MARKET	600,000
TOTAL MARKET VALUE	976,789
SOH/AGL Deduction	294,262
ASSESSED VALUE	682,527
TOTAL EXEMPTION VALUE	0
BASE TAXABLE VALUE	682,527
TOTAL JUST VALUE	976,789
NCON VALUE	0
INCOME VALUE	
PREVIOUS YEAR MKT VALUE	679,295

PERMIT NUM	DESCRIPTION	AMT	ISSUED

SALES DATA

OFF RECORD Number	DATE	TYPE INST	Q U	V I	RSN CD	SALE PRICE
2254/1113	2/08/2019	WD	Q	I	01	605,000
GRANTOR: KIDD C WILLIAM & JEAN						
GRANTEE: TRIBUZIO DOMINIQUE						
1015/0492	10/23/2001	WD	Q	I		440,000
GRANTOR: SCHMITT EDWARD G & SA						
GRANTEE: KIDD C WILLIAM & JE						

BUILDING NOTES

BUILDING DIMENSIONS

BAS=[YR=1993] W7 DCK=[YR=1994] N6 W3 N4 W5 S4 W2 S6 E10$ W31 N16 W19 DCK=[YR=1994] N4 E4N5W4 N1 U4 L4 W13 D4 L4 S10 SFB=[YR=2010] S12 E18 N12 W18 $ E21 $W3 S12 W18 S22 FST=[YR=1993] S8 FGR=[YR=1993] S24 E24 N24 W24 $E12 N8 W12 $ E12 S8 E12 N8 E3 FOP=[YR=1993] S6 E11 N6 W11 $ E11 S4 E40 N22 $.

EXTRA FEATURES

LN	OB/XF CODE	DESCRIPTION	BLD	CAP	L	W	UNITS	UT	Adj R	ADJ UNIT PRICE	ORIG COND	YEAR ON	YEAR ACTUAL	Q	% COND	OB/XF MKT VALUE	NOTES
2	0504	FP-ELECTRI	0	0	0	0	1.00	UT	2,000.00	2,000.00	100	1983	1983	3	56	1,120	
3	0811	CONCRETE B	0	0	0	0	1,562.00	SF	5.20	5.20	100	1983	1983	3	44	3,574	
4	0850	PEBBLE WLK	0	0	0	0	226.00	SF	3.50	3.50	100	1983	1983	3	44	348	
5	0850	PEBBLE WLK	0	0	0	0	75.00	SF	3.50	3.50	100	1983	1983	3	44	116	
6	0820	WOOD WALK	0	0	0	0	104.00	SF	11.75	11.75	100	1990	1990	3	40	489	

LAND DESCRIPTION

TOTAL OB/XF 5,647

LN	USE CODE	CLS	LAND USE DESCRIPTION	CAP	RD	LOC ZONE	FRONT	DEPTH	TOT LND UTS	UNIT TYPE	DT	DPTH FACT	% COND	TOT ADJ	UNIT PRICE	ADJ UNIT PRICE	LAND VALUE	OTHER ADJUSTMENTS AND NOTES	YEAR	DENSITY	DECL	FRZ	YR	CONSRV
1	000140	C	SFR GOLF A	0		RS-1	0.00	0.00	1.00	LT		1.00	1.00	1.00	600,000.00	600,000.00	600,000							

REVIEW DATE 04/27/2020 BY DJA Total Acres: 0.00 Total Land Value: 600,000 Market: 0 Agricultural: 0 Common: 600,000 PRINTED 08/02/2023 BY SYS