LOT 137
IN OR 854/1211
MARSH CREEK VILLAGE 2

KIRKENDALL GEORGE F & KAREN L
19 CLIFTON AVE
HULL, MA 02045

2023

01-6N-29-1320-0137-0000

NASSAU COUNTY PROPERTY

BUILDING CHARACTERISTICS

ELEMENT	CD	CONSTRUCTION
Exterior Wall	10	ABOVE AVG 100
Roof Structur	03	GABLE/HIP 100
Roof Cover	03	COMP SHNGL 100
Interior Wall	05	DRYWALL 100
Interior Floo	14	CARPET 80
Interior Floo	12	HARDWOOD 20
Air Condition	03	CENTRAL 100
Heating Type	04	AIR DUCTED 100
Bedrooms		3 100
Bathrooms		2.5 100
Frame	02	WOOD FRAME 100
Stories	1.	1. 100
Units		0 100
BUD8 Adjustme	05	DIST 1A 100
Occupancy	00	NONE 100
Quality	04	Quality Level 04
DOR CODE	0100	SINGLE FAMILY
MAP NUM		MKT AREA 10
NEIGHBORHOOD/LOC	10001.00	

AREA TYPE	TOTAL GROSS AREA	PCT OF BASE	TOT ADJ AREA	SUBAREA MARKET VALUE
BAS	2,186	100	2,186	286,541
BAS	132	100	132	17,303
FEP	304	80	243	31,852
FGR	625	55	344	45,092
FOP	73	30	22	2,884
FST	104	55	57	7,472
PTO	48	5	2	262
UOP	8	20	2	262
TOTALS	3,480		2,988	391,667

MARKET ADJUSTMENTS

TYPE	MDL	EFF. AREA	TOT ADJ PTS	EFF. BASE RATE	REPL. COST NEW	AYB	EYB	ECON	FNCT		NORM	% COND
0500	01	2,988	107.5830	153.31	458,090	1980	1992	0	0	0	14.50	85.50

1 SFR CUST – 0% - 0 Heated Area: 2318 HX Base Yr

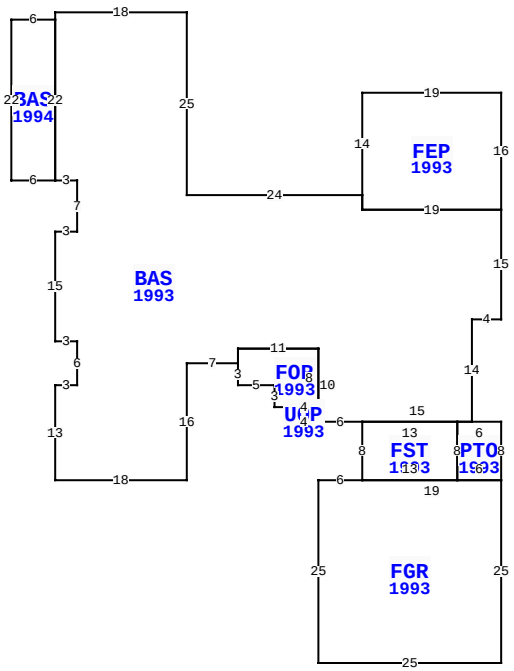

71 MARSH CREEK RD, FERNANDINA BEACH

BLD DATE		LGL DATE	
XF DATE		LAND DATE	
INC DATE		AG DATE	

NASSAU COUNTY PROPERTY — VALUATION SUMMARY

VALUATION BY	STANDARD
Tax Group: 5	Tax Dist:
BUILDING MARKET VALUE	391,667
TOTAL MARKET OB/XF VALUE	8,058
TOTAL LAND VALUE - MARKET	600,000
TOTAL MARKET VALUE	999,725
SOH/AGL Deduction	298,430
ASSESSED VALUE	701,295
TOTAL EXEMPTION VALUE	0
BASE TAXABLE VALUE	701,295
TOTAL JUST VALUE	999,725
NCON VALUE	0
INCOME VALUE	
PREVIOUS YEAR MKT VALUE	695,774

PERMIT NUM	DESCRIPTION	AMT	ISSUED
B960427	REPAIR/RRF	3,500	01/01/1996
B00697	REMODEL	2,500	01/01/1994
0198	H/AC	2,800	08/01/1993
6108	ADDITION	11,932	11/08/1989

SALES DATA

OFF RECORD Number	DATE	TYPE INST	Q U	V I	RSN CD	SALE PRICE
0854/1211	11/04/1998	WD	U	I	07	100
GRANTOR: SPAETH ROBERT W & LIN						
GRANTEE: KIRKENDALL GEORGE F						
0840/0585	7/08/1998	WD	Q	I		300,000
GRANTOR: SPAETH ROBERT W & LIN						
GRANTEE: KIRKENDALL GEORGE F						

BUILDING NOTES

BUILDING DIMENSIONS

FEP=[YR=1993] W19 S14 BAS=[YR=1993] W24 N25 W18 S1
BAS=[YR=1994] W6 S22 E6 N22 $ S22 E3 S7 W3 S15 E3 S6 W3 S13
E18 N16 E7 FOP=[YR=1993] S3 E5 S3 E2 UOP=[YR=1993] S2 E4 N2
W4 $ E4 N8 W11 S2 $ N2 E11 S10 E6 FST=[YR=1993] S8
FGR=[YR=1993] W6 S25 E25 N25 PTO=[YR=1993] N8 W6 S8 E6 $ W19
$ E13 N8 W13 $ E15 N14 E4 N15 W19 N2 $ S2 E19 N16 $.

EXTRA FEATURES

LN	OB/XF CODE	DESCRIPTION	BLD	CAP	L	W	UNITS	UT	Adj R	ADJ UNIT PRICE	ORIG COND	YEAR ON	YEAR ACTUAL	Q	% COND	OB/XF MKT VALUE	NOTES
1	0811	CONCRETE B	0	0	0	0	854.00	SF	5.20	5.20	100	1980	1980	3	35	1,554	
2	0504	FP-ELECTRI	0	0	0	0	1.00	UT	2,000.00	2,000.00	100	1980	1980	3	49	980	
3	0820	WOOD WALK	0	0	0	0	217.00	SF	11.75	11.75	100	1984	1984	3	40	1,020	
4	1242	WD DECK A	0	0	0	0	759.00	SF	10.00	10.00	100	1989	1989	3	20	1,518	
5	0820	WOOD WALK	0	0	0	0	48.00	SF	11.75	11.75	100	1984	1984	3	40	226	
6	0445	BOX FNC 5'	0	0	0	0	27.00	LF	8.10	8.10	100	1980	1980	3	20	44	
7	0445	BOX FNC 5'	0	0	0	0	23.00	LF	8.10	8.10	100	1980	1980	3	20	37	
8	0810	CONCRETE A	0	0	0	0	448.00	SF	6.50	6.50	100	2010	2010	3	92	2,679	

LAND DESCRIPTION

TOTAL OB/XF 8,058

LN	USE CODE	CLS	LAND USE DESCRIPTION	CAP	RD	LOC ZONE	FRONT	DEPTH	TOT LND UTS	UNIT TYPE	DT	DPTH FACT	% COND	TOT ADJ	UNIT PRICE	ADJ UNIT PRICE	LAND VALUE	OTHER ADJUSTMENTS AND NOTES	YEAR	DENSITY	DECL	FRZ	YR	CONSRV
1	000140	C	SFR GOLF A	0		RS-1	0.00	0.00	1.00	LT		1.00	1.00	1.00	600,000.00	600,000.00	600,000							

REVIEW DATE 03/01/2018 BY DJX Total Acres: 0.00 Total Land Value: 600,000 Market: 0 Agricultural: 0 Common: 600,000 PRINTED 08/02/2023 BY SYS