LOT 135
IN OR 1836/1700
MARSH CREEK VLG 2 PB 4/21 & 22

SHERRERD KATRINA F TRUST/SHERRERD KATRINA F TRUSTE
31 EDNAM VILLAGE ST
CHARLOTTESVILLE, VA 22903

2023

01-6N-29-1320-0135-0000

BUILDING CHARACTERISTICS

ELEMENT	CD	CONSTRUCTION
Exterior Wall	10	ABOVE AVG 70
Exterior Wall	17	CB STUCCO 30
Roof Structur	08	IRREGULAR 100
Roof Cover	12	MODULAR MT 100
Interior Wall	05	DRYWALL 100
Interior Floo	12	HARDWOOD 70
Interior Floo	14	CARPET 30
Air Condition	03	CENTRAL 100
Heating Type	04	AIR DUCTED 100
Bedrooms		3 100
Bathrooms		3.5 100
Frame	02	WOOD FRAME 100
Stories	2.	2. 100
Units		0 100
BUD8 Adjustme	05	DIST 1A 100
Quality	04	Quality Level 04
DOR CODE	0100	SINGLE FAMILY
MAP NUM		MKT AREA 10
NEIGHBORHOOD/LOC	10001.00	

AREA TYPE	TOTAL GROSS AREA	PCT OF BASE	TOT ADJ AREA	SUBAREA MARKET VALUE
BAL	65	15	10	1,932
BAL	283	15	42	8,114
BAS	2,970	100	2,970	573,750
FGR	864	55	475	91,762
FOP	30	30	9	1,739
FOP	65	30	20	3,864
FOP	100	30	30	5,795
FOP	196	30	59	11,398
FOP	214	30	64	12,364
FOP	214	30	64	12,364
TOTALS	9,139		6,149	1,187,874

MARKET ADJUSTMENTS

TYPE	MDL	EFF. AREA	TOT ADJ PTS	EFF. BASE RATE	REPL. COST NEW	AYB	EYB	ECON	FNCT		NORM	% COND
0500	11	6,149	140.6988	200.50	1,232,874	2014	2014	0	0	0	3.65	96.35

1 SFR CUST – 0% - 0 Heated Area: 4390 HX Base Yr

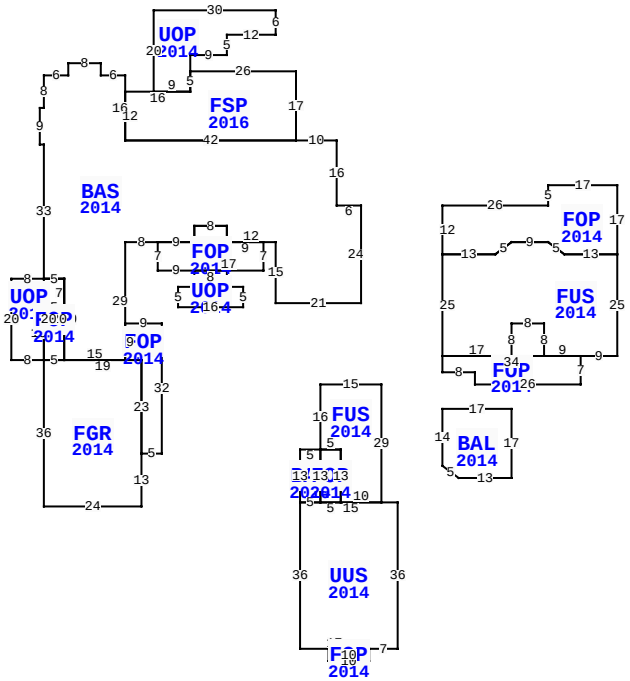

** This building has 18 Sub-Areas

72 MARSH CREEK RD, FERNANDINA BEACH

BLD DATE		LGL DATE	
XF DATE		LAND DATE	
INC DATE		AG DATE	

NASSAU COUNTY PROPERTY

PAGE 1 of 2 5

VALUATION SUMMARY

VALUATION BY	STANDARD
Tax Group: 5	Tax Dist:
BUILDING MARKET VALUE	1,187,874
TOTAL MARKET OB/XF VALUE	35,737
TOTAL LAND VALUE - MARKET	750,000
TOTAL MARKET VALUE	1,973,611
SOH/AGL Deduction	273,812
ASSESSED VALUE	1,699,799
TOTAL EXEMPTION VALUE	0
BASE TAXABLE VALUE	1,699,799
TOTAL JUST VALUE	1,973,611
NCON VALUE	0
INCOME VALUE	
PREVIOUS YEAR MKT VALUE	1,581,148

PERMIT NUM	DESCRIPTION	AMT	ISSUED
B1327474	CO ISSUED	0	11/13/2014
E1326491	REMODEL	0	08/01/2013
B1327474	SFR	643,605	07/01/2013
B1226717	DEMO INT/DCK	3,200	12/01/2012
7350	ADDITION	36,650	06/25/1991

SALES DATA

OFF RECORD Number	DATE	TYPE INST	Q / U	V / I	RSN CD	SALE PRICE
1836/1700	1/23/2013	DG	U	I	30	100
GRANTOR: SMITH DAVID G & KATRI						
GRANTEE: SHERRERD KATRINA F						
1794/0815	5/21/2012	WD	Q	I	02	1,087,500
GRANTOR: COOPER RICHARD A TRUS						
GRANTEE: SHERRERD KATRINA F						

BUILDING NOTES

BUILDING DIMENSIONS

BAS=[YR=2014] W6N16W10 FSP=[YR=2016] N17 W26 UOP=[YR=2014] N4E9N5E12N6W30S20 E9N5$ S5W16S12E42$ W42N16W6N3 W8S3W6S8W1S9E1S33 UOP=[YR=2014] W8 S20E8 FGR=[YR=2014] S36E24N13 FOP=[YR=2014] E5N32W9S9E4S23$ N23W19 FOP=[YR=2014] N20W5S20E5$ W5$ N13E5 N7W5$ E5S20 E15 N29E8 FOP=[YR=2014] S7E9 UOP=[YR=2014] S4W4S5E16N5W4N4W8 $ E17N7W9N4W8S4W9$ E9N4E8S4E12 S15E21N24$ PTR= E20 FOP=[YR=2014] E26N5E17S17 FUS=[YR=2014] S25W9 FOP=[YR=2014] S7W26N3W8N4E34$ W9N8W8 S8W17N25E13 U3 R4 E9 D3 R4 E13$ W13 U3 L4 W9 L4 D3 W13N12$ W20$ PTR=E20S50 BAL=[YR=2014] E17S17W13 U3 L4 N14$ W20N50$ PTR=S60W15 BAL=[YR=2014] E5 FUS=[YR=2014] N16E15S29 UUS=[YR=2014] E4S36W7 FOP=[YR=2014] S3W10 N3E10$ W17 N36E5

EXTRA FEATURES

LN	OB/XF CODE	DESCRIPTION	BLD	CAP	L	W	UNITS	UT	Adj R	ADJ UNIT PRICE	ORIG COND	YEAR ON	YEAR ACTUAL	Q	% COND	OB/XF MKT VALUE	NOTES
1	0812	CONCRETE C	0	0	0	0	3,728.00	SF	4.00	4.00	100	2014	2014	3	95	14,166	
2	0300	BOAT DCK W	0	0	0	0	800.00	SF	40.00	40.00	100	1983	1983	3	20	6,400	
3	0504	FP-ELECTRI	0	0	0	0	1.00	UT	2,000.00	2,000.00	100	2014	2014	3	97	1,940	
6	1242	WD DECK A	0	0	0	0	976.00	SF	10.00	10.00	100	1983	1983	3	20	1,952	
8	0812	CONCRETE C	0	0	0	0	235.00	SF	4.00	4.00	100	2014	2014	3	95	893	
9	0303	FLT DOCK W	0	0	10	20	200.00	SF	26.00	26.00	100	2010	2010	3	64	3,328	
10	0317	DCK PLNG W	0	0	0	0	2.00	UT	1,000.00	1,000.00	100	2012	2012	3	60	1,200	
11	0310	AL GANG WY	0	0	0	0	20.00	LF	115.00	115.00	100	2012	2012	3	60	1,380	
12	0810	CONCRETE A	0	0	0	0	524.00	SF	6.50	6.50	100	2014	2014	3	95	3,236	
13	0810	CONCRETE A	0	0	0	0	115.00	SF	6.50	6.50	100	2014	2014	3	95	710	

TOTAL OB/XF 35,205

LAND DESCRIPTION

LN	USE CODE	CLS	LAND USE DESCRIPTION	CAP	RD	LOC ZONE	FRONT	DEPTH	TOT LND UTS	UNIT TYPE	DT	DPTH FACT	% COND	TOT ADJ	UNIT PRICE	ADJ UNIT PRICE	LAND VALUE	OTHER ADJUSTMENTS AND NOTES	YEAR	DENSITY	DECL	FRZ	YR	CONSRV
1	000130	C	SFR WATER	0		RS-1	0.00	0.00	1.00	LT		1.00	1.00	1.00	750,000.00	750,000.00	750,000							

REVIEW DATE 10/18/2016 BY DJ Total Acres: 0.00 Total Land Value: 750,000 Market: 0 Agricultural: 0 Common: 750,000 PRINTED 08/02/2023 BY SYS

LOT 135
IN OR 1836/1700
MARSH CREEK VLG 2 PB 4/21 & 22

SHERRERD KATRINA F TRUST/SHERRERD KATRINA F TRUSTE
31 EDNAM VILLAGE ST
CHARLOTTESVILLE, VA 22903

2023

01-6N-29-1320-0135-0000

NASSAU COUNTY PROPERTY

BUILDING CHARACTERISTICS

ELEMENT	CD	CONSTRUCTION

DOR CODE	0100	SINGLE FAMILY	
MAP NUM		MKT AREA	10
NEIGHBORHOOD/LOC	10001.00		

AREA TYPE	TOTAL GROSS AREA	PCT OF BASE	TOT ADJ AREA	SUBAREA MARKET VALUE
TOTALS				

MARKET ADJUSTMENTS

TYPE	MDL	EFF. AREA	TOT ADJ PTS	EFF. BASE RATE	REPL. COST NEW	AYB	EYB	ECON	FNCT		NORM	% COND

BLD DATE		LGL DATE	
XF DATE		LAND DATE	
INC DATE		AG DATE	

VALUATION SUMMARY

VALUATION BY	STANDARD
Tax Group: 5	Tax Dist:
BUILDING MARKET VALUE	1,187,874
TOTAL MARKET OB/XF VALUE	35,737
TOTAL LAND VALUE - MARKET	750,000
TOTAL MARKET VALUE	1,973,611
SOH/AGL Deduction	273,812
ASSESSED VALUE	1,699,799
TOTAL EXEMPTION VALUE	0
BASE TAXABLE VALUE	1,699,799
TOTAL JUST VALUE	1,973,611
NCON VALUE	0
INCOME VALUE	
PREVIOUS YEAR MKT VALUE	1,581,148

PERMIT NUM	DESCRIPTION	AMT	ISSUED

SALES DATA

OFF RECORD Number	DATE	TYPE INST	Q / U	V / I	RSN CD	SALE PRICE
1836/1700	1/23/2013	DG	U	I	30	100
GRANTOR: SMITH DAVID G & KATRI						
GRANTEE: SHERRERD KATRINA F						
1794/0815	5/21/2012	WD	Q	I	02	1,087,500
GRANTOR: COOPER RICHARD A TRUS						
GRANTEE: SHERRERD KATRINA F						

BUILDING NOTES

BUILDING DIMENSIONS

EXTRA FEATURES

LN	OB/XF CODE	DESCRIPTION	BLD	CAP	L	W	UNITS	UT	Adj R	ADJ UNIT PRICE	ORIG COND	YEAR ON	YEAR ACTUAL	Q	% COND	OB/XF MKT VALUE	NOTES
14	1242	WD DECK A	0	0	3	12	36.00	SF	10.00	10.00	100	2014	2014	3	70	252	
15	1242	WD DECK A	0	0	5	8	40.00	SF	10.00	10.00	100	2014	2014	3	70	280	

LAND DESCRIPTION

TOTAL OB/XF 532

LN	USE CODE	CLS	LAND USE DESCRIPTION	CAP	RD	LOC ZONE	FRONT	DEPTH	TOT LND UTS	UNIT TYPE	DT	DPTH FACT	% COND	TOT ADJ	UNIT PRICE	ADJ UNIT PRICE	LAND VALUE	OTHER ADJUSTMENTS AND NOTES	YEAR	DENSITY	DECL	FRZ	YR	CONSRV

REVIEW DATE 10/18/2016 BY DJ Total Acres: 0.00 Total Land Value: 750,000 Market: 0 Agricultural: 0 Common: 750,000 PRINTED 08/02/2023 BY SYS