LOT 113
IN OR 1927/985
MARSH CREEK VILLAGE UNIT 2

WALSH THERESA L
41 MARSH CREEK RD
FERNANDINA BEACH, FL 32034

2023

01-6N-29-1320-0113-0000

BUILDING CHARACTERISTICS

ELEMENT	CD	CONSTRUCTION
Exterior Wall	10	ABOVE AVG 100
Roof Structur	03	GABLE/HIP 100
Roof Cover	03	COMP SHNGL 100
Interior Wall	05	DRYWALL 100
Interior Floo	14	CARPET 90
Interior Floo	13	LVT/LAMNT 10
Air Condition	03	CENTRAL 100
Heating Type	04	AIR DUCTED 100
Bedrooms		3 100
Bathrooms		2 100
Frame	02	WOOD FRAME 100
Stories	1.	1. 100
Units		0 100
BUD8 Adjustme	05	DIST 1A 100
Quality	03	Quality Level 03

DOR CODE 0100 SINGLE FAMILY
MAP NUM | MKT AREA 10
NEIGHBORHOOD/LOC 10001.00

AREA TYPE	TOTAL GROSS AREA	PCT OF BASE	TOT ADJ AREA	SUBAREA MARKET VALUE
BAS	1,831	100	1,831	182,483
DCK	93	10	9	897
DCK	192	10	19	1,893
DCK	328	10	33	3,289
FOP	72	30	22	2,193
FSP	84	40	34	3,388
FSP	84	40	34	3,388
TOTALS	2,684		1,982	197,531

MARKET ADJUSTMENTS

TYPE	MDL	EFF. AREA	TOT ADJ PTS	EFF. BASE RATE	REPL. COST NEW	AYB	EYB	ECON	FNCT		NORM	% COND
0100	11	1,982	134.6657	121.54	240,892	1978	1978	0	0	0	18.00	82.00

1 SINGLE FAM – 100% - 2020 Heated Area: 1831 HX Base Yr 2020

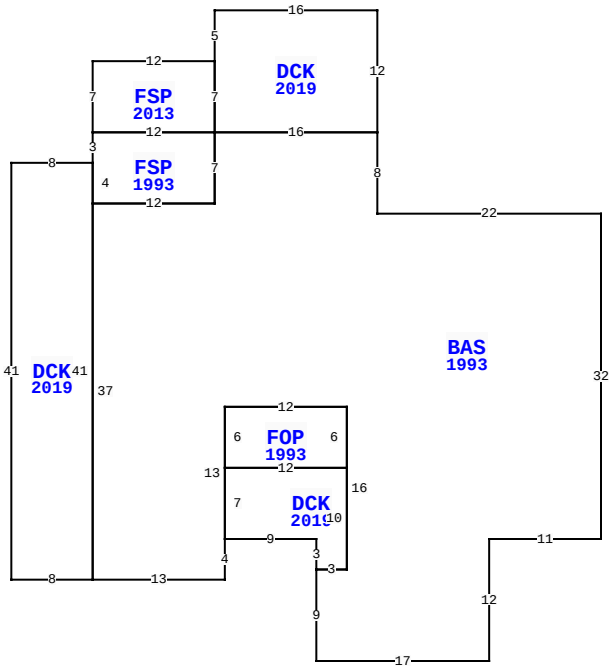

41 MARSH CREEK RD, FERNANDINA BEACH

BLD DATE		LGL DATE	
XF DATE		LAND DATE	
INC DATE		AG DATE	

NASSAU COUNTY PROPERTY

PAGE 1 of 1 5

VALUATION SUMMARY

VALUATION BY		STANDARD
Tax Group: 5	Tax Dist:	
BUILDING MARKET VALUE		197,531
TOTAL MARKET OB/XF VALUE		11,720
TOTAL LAND VALUE - MARKET		540,000
TOTAL MARKET VALUE		749,251
SOH/AGL Deduction		343,447
ASSESSED VALUE		405,804
TOTAL EXEMPTION VALUE	HX HB WX	55,000
BASE TAXABLE VALUE		350,804
TOTAL JUST VALUE		749,251
NCON VALUE		0
INCOME VALUE		
PREVIOUS YEAR MKT VALUE		532,618

PERMIT NUM	DESCRIPTION	AMT	ISSUED
B1900150	DECKING	8,890	01/18/2019
E1326934	NEW CONSTR	0	11/01/2013
B1326820	MASTBATH	16,000	01/01/2013

SALES DATA

OFF RECORD Number	DATE	TYPE INST	Q U	V I	RSN CD	SALE PRICE
1927/0985	3/21/2014	QC	U	I	11	290,000
GRANTOR: WALSH PHILIP J						
GRANTEE: WALSH THERESA L						
1833/1835	12/28/2012	WD	Q	I	01	290,000
GRANTOR: WATSON JOHN P						
GRANTEE: WALSH PHILIP J						

BUILDING NOTES

BUILDING DIMENSIONS

BAS=[YR=1993] W22 N8 DCK=[YR=2019] N12 W16 S5 FSP=[YR=2013] W12 S7 FSP=[YR=1993] S3 DCK=[YR=2019] W8 S41 E8 N41$S4 E12 N7 W12$E12 N7$ S7 E16$ W16 S7 W12 S37 E13 N4 DCK=[YR=2019] E9 S3 E3 N10 FOP=[YR=1993] N6 W12 S6 E12$ W12 S7$ N13 E12 S16 W3 S9 E17 N12 E11 N32 $.

EXTRA FEATURES

LN	OB/XF CODE	DESCRIPTION	BLD	CAP	L	W	UNITS	UT	Adj R	ADJ UNIT PRICE	ORIG COND	YEAR ON	YEAR ACTUAL	Q	% COND	OB/XF MKT VALUE	NOTES
1	0504	FP-ELECTRI	0	100	0	0	1.00	UT	2,000.00	2,000.00	100	1980	1980	3	49	980	
2	0850	PEBBLE WLK	0	100	0	0	153.00	SF	3.50	3.50	100	1980	1980	3	35	187	
3	0811	CONCRETE B	0	100	0	0	1,191.00	SF	5.20	5.20	100	2019	2019	3	99	6,131	
4	0825	BRICK	0	100	0	0	207.00	SF	12.50	12.50	100	2019	2019	3	100	2,588	
5	1076	TRELLIS A	0	100	0	0	263.00	SF	7.50	7.50	100	2019	2019	3	93	1,834	

LAND DESCRIPTION

TOTAL OB/XF 11,720

LN	USE CODE	CLS	LAND USE DESCRIPTION	CAP	RD	LOC ZONE	FRONT	DEPTH	TOT LND UTS	UNIT TYPE	DT	DPTH FACT	% COND	TOT ADJ	UNIT PRICE	ADJ UNIT PRICE	LAND VALUE	OTHER ADJUSTMENTS AND NOTES	YEAR	DENSITY	DECL	FRZ	YR	CONSRV
1	000140	C	SFR GOLF A	100		RS-1	0.00	0.00	1.00	LT		1.00	1.00	0.90	600,000.00	540,000.00	540,000							

REVIEW DATE 07/30/2019 BY DJ Total Acres: 0.00 Total Land Value: 540,000 Market: 0 Agricultural: 0 Common: 540,000 PRINTED 08/02/2023 BY SYS