LOT 179
IN OR 2083/995
MARSH CREEK VILLAGE UNIT 1B

WILKERSON DONALD & JANET TRUST/WILKERSON DONALD H
29 MARSH HAWK RD
FERNANDINA BEACH, FL 32034

2023

01-6N-29-131B-0179-0000

BUILDING CHARACTERISTICS

ELEMENT	CD	CONSTRUCTION
Exterior Wall	12	CEDAR 100
Roof Structur	08	IRREGULAR 100
Roof Cover	03	COMP SHNGL 100
Interior Wall	05	DRYWALL 100
Interior Floo	11	CLAY TILE 60
Interior Floo	14	CARPET 40
Air Condition	03	CENTRAL 100
Heating Type	04	AIR DUCTED 100
Bedrooms		3 100
Bathrooms		3.5 100
Frame	02	WOOD FRAME 100
Stories	2.	2. 100
Units		0 100
Occupancy	00	NONE 100
Quality	04	Quality Level 04
DOR CODE	0100	SINGLE FAMILY
MAP NUM		MKT AREA 10
NEIGHBORHOOD/LOC	10001.00	

AREA TYPE	TOTAL GROSS AREA	PCT OF BASE	TOT ADJ AREA	SUBAREA MARKET VALUE
BAL	100	15	15	2,189
BAS	2,000	100	2,000	291,956
FGR	518	55	285	41,604
FOP	36	30	11	1,606
FST	230	55	126	18,394
FST	340	55	187	27,298
FUS	926	100	926	135,176
PTO	32	5	2	292
UOP	70	20	14	2,043
UOP	149	20	30	4,380
TOTALS	4,401		3,596	524,936

MARKET ADJUSTMENTS

TYPE	MDL	EFF. AREA	TOT ADJ PTS	EFF. BASE RATE	REPL. COST NEW	AYB	EYB	ECON	FNCT		NORM	% COND
0500	01	3,596	115.1010	164.02	589,816	2000	2000	0	0	0	11.00	89.00

1 SFR CUST – 100% - 2023 Heated Area: 2926 HX Base Yr 2023

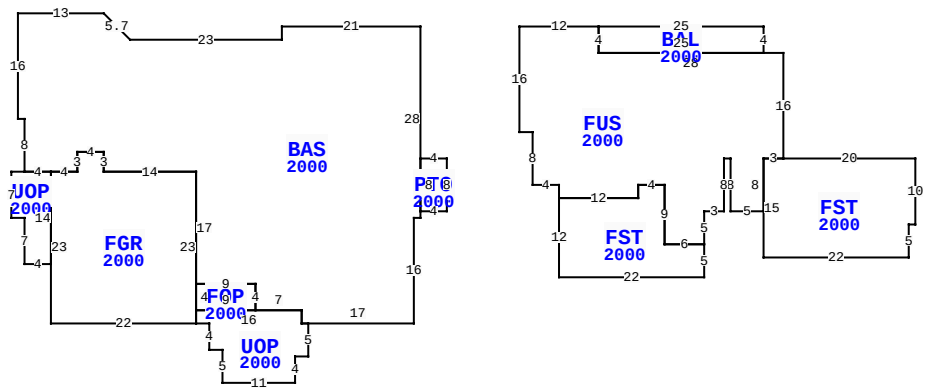

29 MARSH HAWK RD, FERNANDINA BEACH

BLD DATE		LGL DATE	
XF DATE		LAND DATE	
INC DATE		AG DATE	

NASSAU COUNTY PROPERTY

PAGE 1 of 1 5

VALUATION SUMMARY

VALUATION BY		STANDARD
Tax Group: 5	Tax Dist:	
BUILDING MARKET VALUE		524,936
TOTAL MARKET OB/XF VALUE		11,294
TOTAL LAND VALUE - MARKET		600,000
TOTAL MARKET VALUE		1,136,230
SOH/AGL Deduction		0
ASSESSED VALUE		1,136,230
TOTAL EXEMPTION VALUE	HX HB	50,000
BASE TAXABLE VALUE		1,086,230
TOTAL JUST VALUE		1,136,230
NCON VALUE		0
INCOME VALUE		
PREVIOUS YEAR MKT VALUE		847,768

PERMIT NUM	DESCRIPTION	AMT	ISSUED
R991921	REPAIR/RRF	6,200	08/01/1999
B9905911	NEW CONSTR	439,750	03/01/1999

SALES DATA

OFF RECORD Number	DATE	TYPE INST	Q / U	V / I	RSN CD	SALE PRICE
2083/0995	11/10/2016	WD	Q	I	01	840,000
GRANTOR: KOONS KEVIN J						
GRANTEE: WILKERSON DONALD H						
0752/1964	3/01/1996	WD	Q	V		85,000
GRANTOR: UNITED CONSTRUCTION I						
GRANTEE: KOONS KEVIN J						

BUILDING NOTES

BUILDING DIMENSIONS

BAS=[YR=2000] W21 S2 W23 U4 L4 W13 S16E1 S8 UOP=[YR=2000] W2 S7 E2 S7 E4 N14 W4 $ E4 FGR=[YR=2000] S23 E22 N23 W14 N3 W4 S3 W4 $ E4 N3 E4S3 E14 S17 FOP=[YR=2000] S4 UOP=[YR=2000] S2 E2 S4 E2 S5 E11 N4 E2 N5 W1 N2 W16 $ E9 N4 W9 $ E9 S4 E7 S2 E17 N16 E1 N1 PTO=[YR=2000] E4 N8 W4 S8 $ N28 $ PTR= E15 FUS=[YR=2000] E12 BAL=[YR=2000] E25 S4 W25 N4 $ S4 E28 S16 FST=[YR=2000] E20 S10 W1 S5 W22 N15 E3 $ W3 S8 W5 N8 W1 S8 W3 S5 FST=[YR=2000] S5 W22 N12 E12 N2 E4 S9 E6 $ W6 N9 W4 S2 W12 N2 W4 N8 W2 N16 $ W15 $.

EXTRA FEATURES

LN	OB/XF CODE	DESCRIPTION	BLD	CAP	L	W	UNITS	UT	Adj R	ADJ UNIT PRICE	ORIG COND	YEAR ON	YEAR ACTUAL	Q	% COND	OB/XF MKT VALUE	NOTES
1	0504	FP-ELECTRI	0	100	0	0	1.00	UT	2,000.00	2,000.00	100	2000	2000	3	85	1,700	
2	0811	CONCRETE B	0	100	0	0	711.00	SF	5.20	5.20	100	2000	2000	3	80	2,958	
3	0830	FLAGSTONE	0	100	0	0	551.00	SF	12.00	12.00	100	2000	2000	3	80	5,290	
4	1126	CB/STC 8"	0	100	0	0	183.00	SF	8.00	8.00	100	2000	2000	3	80	1,171	
5	0444	BOX FNC 4'	0	100	0	0	8.00	LF	6.50	6.50	100	2000	2000	3	20	10	
6	0463	FENCE GATE	0	100	0	0	1.00	UT	300.00	300.00	100	2000	2000	3	55	165	

LAND DESCRIPTION

TOTAL OB/XF 11,294

LN	USE CODE	CLS	LAND USE DESCRIPTION	CAP	RD	LOC ZONE	FRONT	DEPTH	TOT LND UTS	UNIT TYPE	DT	DPTH FACT	% COND	TOT ADJ	UNIT PRICE	ADJ UNIT PRICE	LAND VALUE	OTHER ADJUSTMENTS AND NOTES	YEAR	DENSITY	DECL	FRZ	YR	CONSRV
1	000116	C	SFR MARSH	100		RS-1	0.00	0.00	1.00	LT		1.00	1.00	1.00	600,000.00	600,000.00	600,000							

REVIEW DATE 04/27/2020 BY DJA Total Acres: 0.00 Total Land Value: 600,000 Market: 0 Agricultural: 0 Common: 600,000 PRINTED 08/02/2023 BY SYS