LOT 172
MARSH CREEK VLG 1-A PB 4/22-A

MARTINEZ ANGEL A & MARIA P REVOCABLE TRUST/MARTINE
6517 CASTANEDA ST
CORAL GABLES, FL 33146

2023

01-6N-29-131A-0172-0000

NASSAU COUNTY PROPERTY

BUILDING CHARACTERISTICS

ELEMENT	CD	CONSTRUCTION
Exterior Wall	14	WD SHINGLE 100
Roof Structur	08	IRREGULAR 100
Roof Cover	03	COMP SHNGL 100
Interior Wall	05	DRYWALL 100
Interior Floo	14	CARPET 60
Interior Floo	11	CLAY TILE 40
Air Condition	03	CENTRAL 100
Heating Type	04	AIR DUCTED 100
Bedrooms		3 100
Bathrooms		2.5 100
Frame	02	WOOD FRAME 100
Stories	2.	2. 100
Units		0 100
Occupancy	00	NONE 100
Quality	04	Quality Level 04
DOR CODE	0100	SINGLE FAMILY
MAP NUM		MKT AREA 10
NEIGHBORHOOD/LOC	10001.00	

AREA TYPE	TOTAL GROSS AREA	PCT OF BASE	TOT ADJ AREA	SUBAREA MARKET VALUE
BAS	1,178	100	1,178	169,093
FGR	478	55	263	37,751
FOP	54	30	16	2,297
FOP	54	30	16	2,297
FOP	91	30	27	3,876
FST	48	55	26	3,732
FUS	1,243	100	1,243	178,423
PTO	521	5	26	3,732
STR	48	10	5	718
UOP	91	20	18	2,583
TOTALS	3,806		2,818	404,503

MARKET ADJUSTMENTS

TYPE	MDL	EFF. AREA	TOT ADJ PTS	EFF. BASE RATE	REPL. COST NEW	AYB	EYB	ECON	FNCT		NORM	% COND
0500	01	2,818	117.1296	166.91	470,352	1994	1994	0	0	0	14.00	86.00

1 SFR CUST – 0% - 0 Heated Area: 2421 HX Base Yr

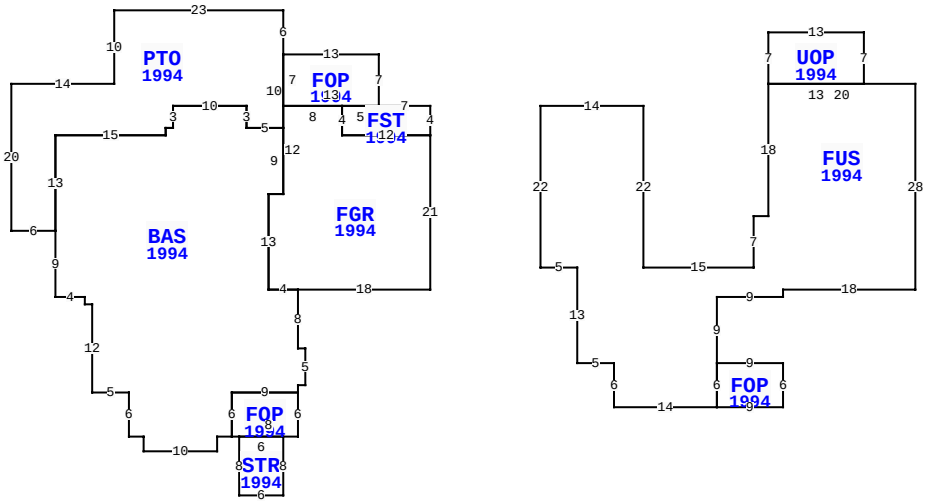

7 ROYAL TERN RD, FERNANDINA BEACH

BLD DATE		LGL DATE	
XF DATE		LAND DATE	
INC DATE		AG DATE	

VALUATION SUMMARY

VALUATION BY	STANDARD
Tax Group: 5	Tax Dist:
BUILDING MARKET VALUE	404,503
TOTAL MARKET OB/XF VALUE	4,944
TOTAL LAND VALUE - MARKET	450,000
TOTAL MARKET VALUE	859,447
SOH/AGL Deduction	84,268
ASSESSED VALUE	775,179
TOTAL EXEMPTION VALUE	0
BASE TAXABLE VALUE	775,179
TOTAL JUST VALUE	859,447
NCON VALUE	0
INCOME VALUE	
PREVIOUS YEAR MKT VALUE	704,708

PERMIT NUM	DESCRIPTION	AMT	ISSUED
B00520	NEW CONSTR	163,700	09/01/1993
8337	NEW CONSTR	156,000	08/27/1992

SALES DATA

OFF RECORD Number	DATE	TYPE INST	Q U	V I	RSN CD	SALE PRICE
2652/1584	6/29/2023	QC	U	I	11	100
GRANTOR: MARTINEZ MARIA & ANGE						
GRANTEE: MARTINEZ ANGEL A &						
2514/0247	11/12/2021	WD	Q	I	01	915,000
GRANTOR: SELLARS PRUDENCE C						
GRANTEE: MARTINEZ MARIA & AN						

BUILDING NOTES

EXTRA FEATURES

L N	OB/XF CODE	DESCRIPTION	BLD	CAP	L	W	UNITS	UT	Adj R	ADJ UNIT PRICE	ORIG COND	YEAR ON	YEAR ACTUAL	Q	% COND	OB/XF MKT VALUE	NOTES
1	0504	FP-ELECTRI	0	0	0	0	1.00	UT	2,000.00	2,000.00	100	1994	1994	3	77	1,540	
2	0812	CONCRETE C	0	0	0	0	1,092.00	SF	4.00	4.00	100	1994	1994	3	70	3,058	
3	0810	CONCRETE A	0	0	0	0	40.00	SF	6.50	6.50	100	1994	1994	3	70	182	
4	0446	BOX FNC 6'	0	0	0	0	41.00	LF	20.00	20.00	100	1994	1994	3	20	164	

BUILDING DIMENSIONS

FST=[YR=1994] W7 FOP=[YR=1994] N7 W13 PTO=[YR=1994] N6 W23 S10 W14 S20 E6 BAS=[YR=1994] S9 E4 S1 E1 S12 E5 S6 E2 S2 E10 N2 E2 FOP=[YR=1994] E1 STR=[YR=1994] S8 E6 N8 W6$ E8 N6 W9 S6 $ N6 E9 N1 E1 N5 W1 N8 FGR=[YR=1994] E18 N21 W12 N4 W8 S12 W2 S13 E4 $ W4 N13 E2 N9 W5 N3 W10 S3 W1 S1 W15 S13 $ N13 E15 N1 E1 N3 E10 S3 E5 N10 $ S7 E13 $ W5 S4 E12 N4 $ PTR= E15 FUS=[YR=1994] E14 S22 E15 N7 E2 N18 UOP=[YR=1994] N7 E13 S7 W13 $ E20 S28 W18 S1 W9 S9 FOP=[YR=1994] E9 S6 W9 N6 $ S6 W14 N6 W5 N13 W5 N22 $ W15 $.

LAND DESCRIPTION

TOTAL OB/XF 4,944

L N	USE CODE	CLS	LAND USE DESCRIPTION	CAP	R D	LOC ZONE	FRONT	DEPTH	TOT LND UTS	UNIT TYPE	D T	DPTH FACT	% COND	TOT ADJ	UNIT PRICE	ADJ UNIT PRICE	LAND VALUE	OTHER ADJUSTMENTS AND NOTES	YEAR	DENSITY	DECL	FRZ	YR	CONSRV
1	000140	C	SFR GOLF A	0		RS-1	0.00	0.00	1.00	LT		1.00	1.00	1.00	450,000.00	450,000.00	450,000							

REVIEW DATE 06/16/2016 BY DJ Total Acres: 0.00 Total Land Value: 450,000 Market: 0 Agricultural: 0 Common: 450,000 PRINTED 08/02/2023 BY SYS