LOT 91
IN OR 1624/1505 & OR 1624/1506
IN OR 1624/1507 & OR 1624/1508

ARNOLD DEVON D
325 KUWE TRAIL
HINESVILLE, GA 31313

**2023**

**01-6N-29-1300-0091-0000**

## BUILDING CHARACTERISTICS

| ELEMENT | CD | CONSTRUCTION |
|---|---|---|
| Exterior Wall | 12 | CEDAR 90 |
| Exterior Wall | 16 | WD FR STUC 10 |
| Roof Structur | 06 | MANSARD 100 |
| Roof Cover | 11 | SLATE 100 |
| Interior Wall | 05 | DRYWALL 100 |
| Interior Floo | 12 | HARDWOOD 90 |
| Interior Floo | 11 | CLAY TILE 10 |
| Air Condition | 03 | CENTRAL 100 |
| Heating Type | 04 | AIR DUCTED 100 |
| Bedrooms | | 3 100 |
| Bathrooms | | 3.5 100 |
| Frame | 02 | WOOD FRAME 100 |
| Stories | 1. | 1. 100 |
| Units | | 0 100 |
| BUD8 Adjustme | 05 | DIST 1A 100 |
| Occupancy | 00 | NONE 100 |
| Quality | 04 | Quality Level 04 |
| DOR CODE | 0100 | SINGLE FAMILY |
| MAP NUM | | MKT AREA 10 |
| NEIGHBORHOOD/LOC | 10001.00 | |

| AREA TYPE | TOTAL GROSS AREA | PCT OF BASE | TOT ADJ AREA | SUBAREA MARKET VALUE |
|---|---|---|---|---|
| BAS | 1,858 | 100 | 1,858 | 309,971 |
| BAS | 44 | 100 | 44 | 7,341 |
| BAS | 77 | 100 | 77 | 12,846 |
| BAS | 309 | 100 | 309 | 51,551 |
| FCP | 267 | 25 | 67 | 11,178 |
| FOP | 18 | 30 | 5 | 834 |
| FOP | 28 | 30 | 8 | 1,335 |
| FST | 44 | 55 | 24 | 4,004 |
| UOP | 172 | 20 | 34 | 5,672 |
| UOP | 480 | 20 | 96 | 16,016 |
| TOTALS | 3,297 | | 2,522 | 420,747 |

## MARKET ADJUSTMENTS

| TYPE | MDL | EFF. AREA | TOT ADJ PTS | EFF. BASE RATE | REPL. COST NEW | AYB | EYB | ECON | FNCT | | NORM | % COND |
|---|---|---|---|---|---|---|---|---|---|---|---|---|
| 0500 | 01 | 2,522 | 131.5440 | 187.45 | 472,749 | 1979 | 2000 | 0 | 0 | 0 | 11.00 | 89.00 |

1 SFR CUST – 0% - 0 Heated Area: 2288 HX Base Yr

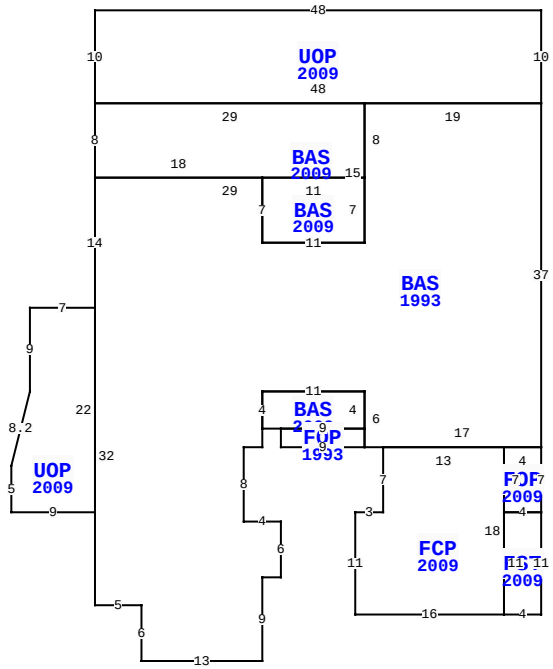


| | | | |
|---|---|---|---|
| BLD DATE | | LGL DATE | |
| XF DATE | | LAND DATE | |
| INC DATE | | AG DATE | |

3 SPOTTED SANDPIPER RD, FERNANDINA BEACH

## NASSAU COUNTY PROPERTY

PAGE 1 of 1 5

### VALUATION SUMMARY

| | |
|---|---|
| VALUATION BY | STANDARD |
| Tax Group: 5 | Tax Dist: |
| BUILDING MARKET VALUE | 420,747 |
| TOTAL MARKET OB/XF VALUE | 10,734 |
| TOTAL LAND VALUE - MARKET | 360,000 |
| TOTAL MARKET VALUE | 791,481 |
| SOH/AGL Deduction | 241,730 |
| ASSESSED VALUE | 549,751 |
| TOTAL EXEMPTION VALUE | 0 |
| BASE TAXABLE VALUE | 549,751 |
| TOTAL JUST VALUE | 791,481 |
| NCON VALUE | 0 |
| INCOME VALUE | |
| PREVIOUS YEAR MKT VALUE | 587,323 |

| PERMIT NUM | DESCRIPTION | AMT | ISSUED |
|---|---|---|---|
| R11444 | REPAIR/RRF | 10,000 | 07/01/2008 |
| P13387 | OTHER | 0 | 07/01/2008 |
| B21483 | ADDITION | 250,000 | 05/01/2008 |

## SALES DATA

| OFF RECORD Number | DATE | TYPE INST | Q U | V I | RSN CD | SALE PRICE |
|---|---|---|---|---|---|---|
| 1624/1508 | 6/05/2009 | WD | U | I | 16 | 44,857 |
| GRANTOR: ARNOLD STEPHEN T | | | | | | |
| GRANTEE: ARNOLD DEVON D | | | | | | |
| 1624/1507 | 6/05/2009 | WD | U | I | 16 | 44,857 |
| GRANTOR: LIONE SUSAN B (ARNOLD | | | | | | |
| GRANTEE: ARNOLD DEVON D | | | | | | |

## BUILDING NOTES

## BUILDING DIMENSIONS

UOP=[YR=2009] W48 S10 BAS=[YR=2009] S8 BAS=[YR=1993] S14 UOP=[YR=2009] W7 S9 L2 D8 S5 E9 N22$ S32 E5 S6 E13 N9 E2 N6 W4 N8 E2 N2 BAS=[YR=2009] E2 FOP=[YR=1993] S2 E9 N2 W9$ E9 N4 W11 S4$ N4 E11 S6 E2 FCP=[YR=2009] S7 W3 S11 E16 FST=[YR=2009] E4 N11 FOP=[YR=2009] N7 W4 S7 E4$ W4 S11$ N18 W13$ E17 N37 W19 S8 BAS=[YR=2009] S7 W11 N7 E11$ W29$ E18 S7 E11 N15 W29$ E48 N10$.

## EXTRA FEATURES

| LN | OB/XF CODE | DESCRIPTION | BLD | CAP | L | W | UNITS | UT | Adj R | ADJ UNIT PRICE | ORIG COND | YEAR ON | YEAR ACTUAL | Q | % COND | OB/XF MKT VALUE | NOTES |
|---|---|---|---|---|---|---|---|---|---|---|---|---|---|---|---|---|---|
| 2 | 0504 | FP-ELECTRI | 0 | 0 | 0 | 0 | 1.00 | UT | 2,000.00 | 2,000.00 | 100 | 1980 | 1980 | 3 | 49 | 980 | |
| 3 | 0855 | CONC PAVER | 0 | 0 | 0 | 0 | 956.00 | SF | 10.00 | 10.00 | 100 | 2009 | 2009 | 3 | 91 | 8,700 | |
| 4 | 0810 | CONCRETE A | 0 | 0 | 0 | 0 | 129.00 | SF | 6.50 | 6.50 | 100 | 2009 | 2009 | 3 | 91 | 763 | |
| 5 | 1126 | CB/STC 8" | 0 | 0 | 20 | 2 | 40.00 | SF | 8.00 | 8.00 | 100 | 2009 | 2009 | 3 | 91 | 291 | |

## LAND DESCRIPTION

TOTAL OB/XF 10,734

| LN | USE CODE | CLS | LAND USE DESCRIPTION | CAP | RD | LOC ZONE | FRONT | DEPTH | TOT LND UTS | UNIT TYPE | DT | DPTH FACT | % COND | TOT ADJ | UNIT PRICE | ADJ UNIT PRICE | LAND VALUE | OTHER ADJUSTMENTS AND NOTES | YEAR | DENSITY | DECL | FRZ | YR | CONSRV |
|---|---|---|---|---|---|---|---|---|---|---|---|---|---|---|---|---|---|---|---|---|---|---|---|---|
| 1 | 000100 | C | SFR | 0 | | RS-1 | 0.00 | 0.00 | 1.00 | LT | | 1.00 | 1.00 | 0.80 | 450,000.00 | 360,000.00 | 360,000 | | | | | | | |

REVIEW DATE 03/06/2018 BY DJX Total Acres: 0.00 Total Land Value: 360,000 Market: 0 Agricultural: 0 Common: 360,000 PRINTED 08/02/2023 BY SYS