LOT 78
IN OR 1842/488
MARSH CREEK VILLAGE 1 PB 4/18

STUDER VIRGINIA L
28 BELTED KINGFISHER
FERNANDINA BEACH, FL 32034

2023

01-6N-29-1300-0078-0000

BUILDING CHARACTERISTICS

ELEMENT	CD	CONSTRUCTION
Exterior Wall	16	WD FR STUC 100
Roof Structur	08	IRREGULAR 100
Roof Cover	03	COMP SHNGL 100
Interior Wall	05	DRYWALL 100
Interior Floo	12	HARDWOOD 70
Interior Floo	11	CLAY TILE 30
Air Condition	03	CENTRAL 100
Heating Type	04	AIR DUCTED 100
Bedrooms		4 100
Bathrooms		4.5 100
Frame	02	WOOD FRAME 100
Stories	2.	2. 100
Units		0 100
Occupancy	00	NONE 100
Quality	04	Quality Level 04
DOR CODE	0100	SINGLE FAMILY
MAP NUM		MKT AREA 10
NEIGHBORHOOD/LOC	10001.00	

AREA TYPE	TOTAL GROSS AREA	PCT OF BASE	TOT ADJ AREA	SUBAREA MARKET VALUE
BAS	1,873	100	1,873	276,284
FGR	484	55	266	39,237
FOP	22	30	7	1,032
FOP	54	30	16	2,360
FST	90	55	50	7,375
FUS	1,093	100	1,093	161,227
UOP	14	20	3	442
UOP	49	20	10	1,475
UOP	329	20	66	9,736
TOTALS	4,008		3,384	499,169

MARKET ADJUSTMENTS

TYPE	MDL	EFF. AREA	TOT ADJ PTS	EFF. BASE RATE	REPL. COST NEW	AYB	EYB	ECON	FNCT		NORM	% COND
0500	01	3,384	116.3064	165.74	560,864	2000	2000	0	0	0	11.00	89.00

2 SFR CUST – 100% - 2014 Heated Area: 2966 HX Base Yr 2014

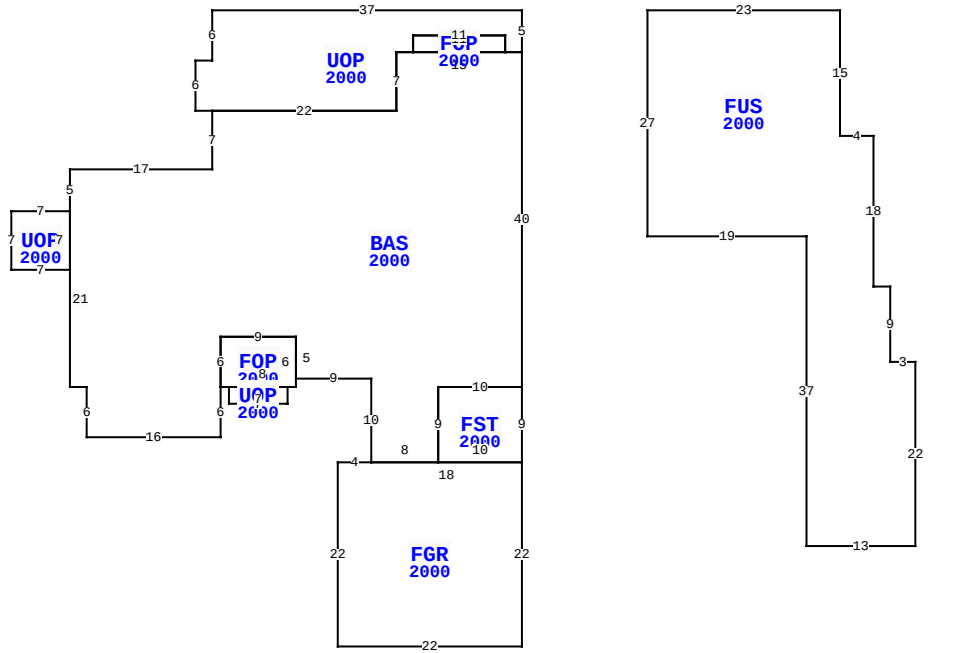

28 BELTED KINGFISHER, FERNANDINA BEACH

BLD DATE		LGL DATE	
XF DATE		LAND DATE	
INC DATE		AG DATE	

NASSAU COUNTY PROPERTY

PAGE 1 of 1 5

VALUATION SUMMARY

VALUATION BY		STANDARD
Tax Group: 5	Tax Dist:	
BUILDING MARKET VALUE		499,169
TOTAL MARKET OB/XF VALUE		10,771
TOTAL LAND VALUE - MARKET		450,000
TOTAL MARKET VALUE		959,940
SOH/AGL Deduction		406,583
ASSESSED VALUE		553,357
TOTAL EXEMPTION VALUE	HX HB	50,000
BASE TAXABLE VALUE		503,357
TOTAL JUST VALUE		959,940
NCON VALUE		0
INCOME VALUE		
PREVIOUS YEAR MKT VALUE		727,307

PERMIT NUM	DESCRIPTION	AMT	ISSUED
B9906297	NEW CONSTR	135,304	07/01/1999

SALES DATA

OFF RECORD Number	DATE	TYPE INST	Q U	V I	RSN CD	SALE PRICE
1842/0488	2/19/2013	WD	Q	I	02	725,000
GRANTOR: HUNZIKER FREDERICK L						
GRANTEE: STUDER VIRGINIA L &						
0832/0682	5/04/1998	WD	Q	V		100,000
GRANTOR: FREITAG LENORE H TRUS						
GRANTEE: HUNZIKER FREDERICK						

BUILDING NOTES

BUILDING DIMENSIONS

UOP=[YR=2000] W37 S6 W2 S6 E2 BAS=[YR=2000] S7 W17 S5 UOP=[YR=2000] W7 S7 E7 N7 $ S21 E2 S6 E16 N6 FOP=[YR=2000] E1 UOP=[YR=2000] S2 E7 N2 W7 $ E8 N6 W9 S6 $ N6 E9 S5 E9 S10 FGR=[YR=2000] W4 S22 E22 N22 FST=[YR=2000] N9 W10 S9 E10 $ W18 $ E8 N9 E10 N40 W15 S7 W22 $ E22 N7 E2 FOP=[YR=2000] E11 N2 W11 S2 $ N2 E11 S2 E2 N5 $ PTR= E15 FUS=[YR=2000] E23 S15 E4 S18 E2 S9 E3 S22 W13 N37 W19 N27 $ W15 $.

EXTRA FEATURES

LN	OB/XF CODE	DESCRIPTION	BLD	CAP	L	W	UNITS	UT	Adj R	ADJ UNIT PRICE	ORIG COND	YEAR ON	YEAR ACTUAL	Q	% COND	OB/XF MKT VALUE	NOTES
1	0504	FP-ELECTRI	0	100	0	0	1.00	UT	2,000.00	2,000.00	100	2000	2000	3	85	1,700	
2	0855	CONC PAVER	0	100	0	0	1,258.00	SF	7.00	7.00	100	2013	2013	3	95	8,366	
3	0825	BRICK	0	100	0	0	60.00	SF	12.50	12.50	100	2000	2000	3	94	705	

LAND DESCRIPTION

TOTAL OB/XF 10,771

LN	USE CODE	CLS	LAND USE DESCRIPTION	CAP	RD	LOC ZONE	FRONT	DEPTH	TOT LND UTS	UNIT TYPE	DT	DPTH FACT	% COND	TOT ADJ	UNIT PRICE	ADJ UNIT PRICE	LAND VALUE	OTHER ADJUSTMENTS AND NOTES	YEAR	DENSITY	DECL	FRZ	YR	CONSRV
1	000100	C	SFR	100		RS-1	0.00	0.00	1.00	LT		1.00	1.00	1.00	450,000.00	450,000.00	450,000							

REVIEW DATE 05/16/2017 BY DJX Total Acres: 0.00 Total Land Value: 450,000 Market: 0 Agricultural: 0 Common: 450,000 PRINTED 08/02/2023 BY SYS