LOT 55
MARSH CREEK VILLAGE 1 PB 4/18

TIPPETTS MARION H L/E/
27 MARSH CREEK ROAD
FERNANDINA BEACH, FL 32034

2023

01-6N-29-1300-0055-0000

BUILDING CHARACTERISTICS

ELEMENT	CD	CONSTRUCTION
Exterior Wall	10	ABOVE AVG 100
Roof Structur	03	GABLE/HIP 100
Roof Cover	03	COMP SHNGL 100
Interior Wall	05	DRYWALL 100
Interior Floo	13	LVT/LAMNT 50
Interior Floo	14	CARPET 50
Air Condition	03	CENTRAL 100
Heating Type	04	AIR DUCTED 100
Bedrooms		3 100
Bathrooms		2 100
Frame	02	WOOD FRAME 100
Stories	1.	1. 100
Units		0 100
BUD8 Adjustme	05	DIST 1A 100
Occupancy	00	NONE 100
Quality	04	Quality Level 04
DOR CODE	0100	SINGLE FAMILY
MAP NUM		MKT AREA 10
NEIGHBORHOOD/LOC	10001.00	

AREA TYPE	TOTAL GROSS AREA	PCT OF BASE	TOT ADJ AREA	SUBAREA MARKET VALUE
BAS	1,791	100	1,791	244,833
DCK	112	10	11	1,503
DCK	388	10	39	5,332
FOP	34	30	10	1,367
FST	88	55	48	6,561
TOTALS	2,413		1,899	259,597

MARKET ADJUSTMENTS

TYPE	MDL	EFF. AREA	TOT ADJ PTS	EFF. BASE RATE	REPL. COST NEW	AYB	EYB	ECON	FNCT		NORM	% COND
0500	01	1,899	113.1900	161.30	306,309	1984	1989	0	0	0	15.25	84.75

1 SFR CUST – 100% - 0 Heated Area: 1791 HX Base Yr

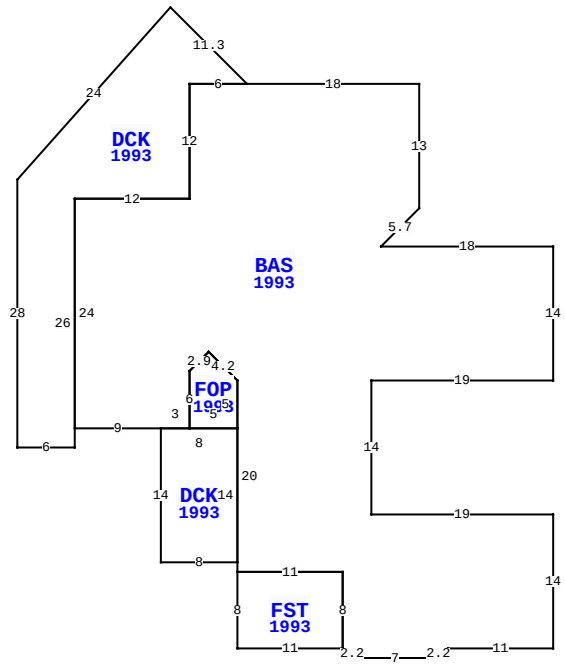

27 MARSH CREEK RD, FERNANDINA BEACH

BLD DATE		LGL DATE	
XF DATE		LAND DATE	
INC DATE		AG DATE	

NASSAU COUNTY PROPERTY

PAGE 1 of 1 5

VALUATION SUMMARY

VALUATION BY		STANDARD
Tax Group: 5	Tax Dist:	
BUILDING MARKET VALUE		259,597
TOTAL MARKET OB/XF VALUE		5,316
TOTAL LAND VALUE - MARKET		540,000
TOTAL MARKET VALUE		804,913
SOH/AGL Deduction		548,147
ASSESSED VALUE		256,766
TOTAL EXEMPTION VALUE	HX HB WX	55,000
BASE TAXABLE VALUE		201,766
TOTAL JUST VALUE		804,913
NCON VALUE		0
INCOME VALUE		
PREVIOUS YEAR MKT VALUE		557,124

PERMIT NUM	DESCRIPTION	AMT	ISSUED

SALES DATA

OFF RECORD Number	DATE	TYPE INST	Q / U	V / I	RSN CD	SALE PRICE
2595/1700	10/05/2022	LE	U	I	11	100
GRANTOR: TIPPETTS MARION H						
GRANTEE: TIPPETTS WENDY HAME						
0502/0990	11/01/1986	WD	U	I		240,000
GRANTOR:						
GRANTEE:						

BUILDING NOTES

BUILDING DIMENSIONS

BAS=[YR=1993] W18 U4 R4 N13 W18 DCK=[YR=1993] U8 L8 D18 L16 S28 E6 N26 E12 N12 E6$ W6 S12 W12 S24 E9 DCK=[YR=1993] S14 E8 N14 FOP=[YR=1993] N5 U3 L3 D2 L2 S6 E5 $ W8$ E3 N6 U2 R2 D3 R3 S20 FST=[YR=1993] S8E11N8W11$ E11S8 D1 R2 E7 U1 R2 E11 N14 W19 N14 E19 N14$.

EXTRA FEATURES

LN	OB/XF CODE	DESCRIPTION	BLD	CAP	L	W	UNITS	UT	Adj R	ADJ UNIT PRICE	ORIG COND	YEAR ON	YEAR ACTUAL	Q	% COND	OB/XF MKT VALUE	NOTES
1	0504	FP-ELECTRI	0	100	0	0	1.00	UT	2,000.00	2,000.00	100	1984	1984	3	58	1,160	
2	0811	CONCRETE B	0	100	30	18	664.00	SF	5.20	5.20	100	1984	1984	3	47	1,623	
3	0850	PEBBLE WLK	0	100	0	0	375.00	SF	3.50	3.50	100	1984	1984	3	47	617	
4	1126	CB/STC 8"	0	100	0	0	474.00	SF	8.00	8.00	100	1984	1984	3	47	1,782	
5	0443	STK FNC 6'	0	100	0	0	10.00	LF	13.00	13.00	100	1984	1984	3	20	26	
6	1076	TRELLIS A	0	100	12	6	72.00	SF	7.50	7.50	100	1984	1984	3	20	108	

LAND DESCRIPTION

TOTAL OB/XF 5,316

LN	USE CODE	CLS	LAND USE DESCRIPTION	CAP	RD	LOC ZONE	FRONT	DEPTH	TOT LND UTS	UNIT TYPE	DT	DPTH FACT	% COND	TOT ADJ	UNIT PRICE	ADJ UNIT PRICE	LAND VALUE	OTHER ADJUSTMENTS AND NOTES	YEAR	DENSITY	DECL	FRZ	YR	CONSRV
1	000140	C	SFR GOLF A	100		RS-1	0.00	0.00	1.00	LT		1.00	1.00	0.90	600,000.00	540,000.00	540,000							

REVIEW DATE 04/27/2020 BY DJA Total Acres: 0.00 Total Land Value: 540,000 Market: 0 Agricultural: 0 Common: 540,000 PRINTED 08/02/2023 BY SYS