LOT 33
MARSH CREEK VILLAGE 1 PB 4/18

SWINSON JOHN T & STACIA S
22 MARSH CREEK ROAD
FERNANDINA BEACH, FL 32034

2023

01-6N-29-1300-0033-0000

BUILDING CHARACTERISTICS

ELEMENT	CD	CONSTRUCTION
Exterior Wall	12	CEDAR 100
Roof Structur	03	GABLE/HIP 100
Roof Cover	03	COMP SHNGL 100
Interior Wall	05	DRYWALL 100
Interior Floo	12	HARDWOOD 50
Interior Floo	11	CLAY TILE 30
Interior Floo	14	CARPET 20
Air Condition	03	CENTRAL 100
Heating Type	04	AIR DUCTED 100
Bedrooms		4 100
Bathrooms		3 100
Frame	02	WOOD FRAME 100
Stories	2.	2. 100
Units		0 100
BUD8 Adjustme	05	DIST 1A 100
Occupancy	00	NONE 100
Quality	04	Quality Level 04
DOR CODE	0100	SINGLE FAMILY
MAP NUM		MKT AREA 10
NEIGHBORHOOD/LOC	10001.00	

AREA TYPE	TOTAL GROSS AREA	PCT OF BASE	TOT ADJ AREA	SUBAREA MARKET VALUE
BAS	1,685	100	1,685	229,788
FGR	600	55	330	45,003
FOP	52	30	16	2,182
FOP	77	30	23	3,136
FOP	100	30	30	4,092
FST	76	55	42	5,728
FUS	600	100	600	81,824
FUS	864	100	864	117,826
UOP	44	20	9	1,228
UOP	77	20	15	2,045
TOTALS	4,415		3,686	502,669

MARKET ADJUSTMENTS

TYPE	MDL	EFF. AREA	TOT ADJ PTS	EFF. BASE RATE	REPL. COST NEW	AYB	EYB	ECON	FNCT		NORM	% COND
0500	01	3,686	109.9980	156.75	577,780	1976	1996	0	0	0	13.00	87.00

1 SFR CUST – 100% - 2023 Heated Area: 3149 HX Base Yr 2023

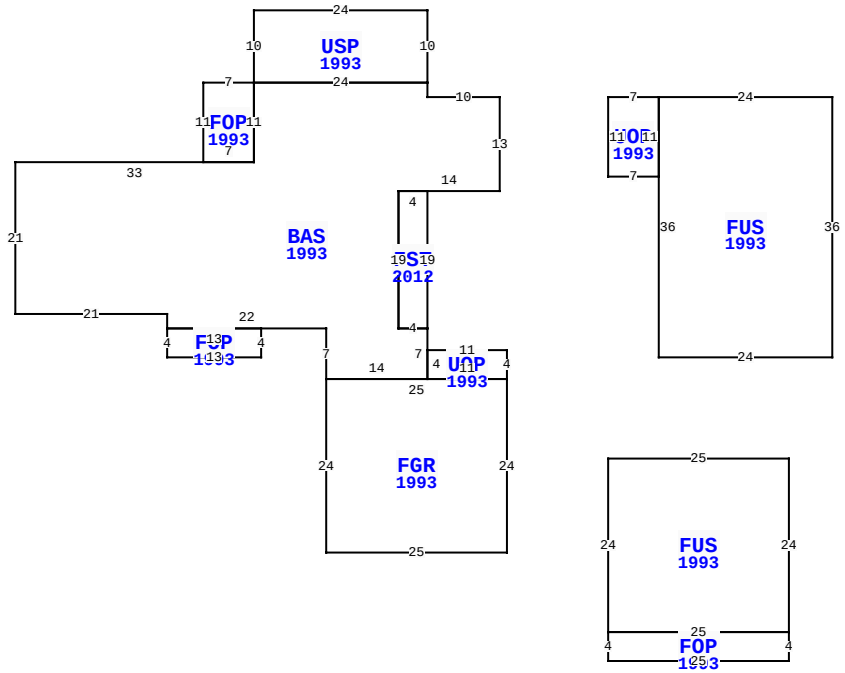

** This building has 11 Sub-Areas

22 MARSH CREEK RD, FERNANDINA BEACH

BLD DATE		LGL DATE	
XF DATE		LAND DATE	
INC DATE		AG DATE	

NASSAU COUNTY PROPERTY

PAGE 1 of 1 5

VALUATION SUMMARY

VALUATION BY		STANDARD
Tax Group: 5	Tax Dist:	
BUILDING MARKET VALUE		502,669
TOTAL MARKET OB/XF VALUE		17,099
TOTAL LAND VALUE - MARKET		450,000
TOTAL MARKET VALUE		969,768
SOH/AGL Deduction		175,516
ASSESSED VALUE		794,252
TOTAL EXEMPTION VALUE	HX HB	50,000
BASE TAXABLE VALUE		744,252
TOTAL JUST VALUE		969,768
NCON VALUE		72,679
INCOME VALUE		
PREVIOUS YEAR MKT VALUE		730,872

PERMIT NUM	DESCRIPTION	AMT	ISSUED
B1225817	FOP'S	1,000	03/01/2012
B1225860	REMODEL	41,000	03/01/2012

SALES DATA

OFF RECORD Number	DATE	TYPE INST	Q U	V I	RSN CD	SALE PRICE
2604/0188	11/22/2022	WD	Q	I	01	1,150,000
GRANTOR: JOHNSON JAMES R						
GRANTEE: SWINSON JOHN T & ST						
1068/1538	7/16/2002	QC	U	I	01	100
GRANTOR: JOHNSON JAMES R & JUD						
GRANTEE: JOHNSON JAMES R						

BUILDING NOTES

BUILDING DIMENSIONS

BAS=[YR=1993] W10 N2 USP=[YR=1993] N10 W24 S10 E24$ W24 FOP=[YR=1993] W7 S11 E7 N11$ S11 W33 S21 E21 S2 FOP=[YR=1993] S4 E13 N4 W13$ E22 S7 FGR=[YR=1993] S24 E25 N24 UOP=[YR=1993] N4 W11 S4 E11 $ W25$ E14 N7 FST=[YR=2012] N19 W4 S19 E4$ W4 N19 E14 N13 $ PTR=E15 UOP=[YR=1993] E7 FUS=[YR=1993] E24 S36 W24 N36$ S11 W7 N11$ W15$ PTR=E15 S50 FUS=[YR=1993] E25 S24 FOP=[YR=1993] S4 W25 N4 E25$ W25 N24$ N50 W15$.

EXTRA FEATURES

LN	OB/XF CODE	DESCRIPTION	BLD	CAP	L	W	UNITS	UT	Adj R	ADJ UNIT PRICE	ORIG COND	YEAR ON	YEAR ACTUAL	Q	% COND	OB/XF MKT VALUE	NOTES
1	0504	FP-ELECTRI	0	100	0	0	1.00	UT	2,000.00	2,000.00	100	1976	1976	3	40	800	
2	0803	ASPHALT C	0	100	0	0	1,875.00	SF	2.00	2.00	100	1980	1980	3	50	1,875	
3	0861	POOL GUNIT	0	100	34	16	544.00	SF	85.00	85.00	100	1983	1983	3	20	9,248	
4	0845	KOOL DECK	0	100	0	0	868.00	SF	7.25	7.25	100	1983	1983	3	44	2,769	
5	1242	WD DECK A	0	100	12	5	60.00	SF	10.00	10.00	100	1986	1986	3	20	120	
6	0820	WOOD WALK	0	100	0	0	465.00	SF	11.75	11.75	100	1986	1986	3	40	2,186	
7	0445	BOX FNC 5'	0	100	0	0	46.00	LF	8.10	8.10	100	1984	1984	3	20	75	
8	0444	BOX FNC 4'	0	100	0	0	20.00	LF	6.50	6.50	100	1984	1984	3	20	26	

LAND DESCRIPTION

TOTAL OB/XF 17,099

LN	USE CODE	CLS	LAND USE DESCRIPTION	CAP	RD	LOC ZONE	FRONT	DEPTH	TOT LND UTS	UNIT TYPE	DT	DPTH FACT	% COND	TOT ADJ	UNIT PRICE	ADJ UNIT PRICE	LAND VALUE	OTHER ADJUSTMENTS AND NOTES	YEAR	DENSITY	DECL	FRZ	YR	CONSRV
1	000140	C	SFR GOLF A	100		RS-1	0.00	0.00	1.00	LT		1.00	1.00	1.00	450,000.00	450,000.00	450,000							

REVIEW DATE 05/17/2017 BY DJX Total Acres: 0.00 Total Land Value: 450,000 Market: 0 Agricultural: 0 Common: 450,000 PRINTED 08/02/2023 BY SYS