LOT 28
IN OR 2013/1092
MARSH CREEK VILLAGE 1 PB 4/18

12 MARSH CREEK JCTS LLC
853 ADAIR AVE NE
ATLANTA, GA 30306

2023

01-6N-29-1300-0028-0000

BUILDING CHARACTERISTICS

ELEMENT	CD	CONSTRUCTION
Exterior Wall	10	ABOVE AVG 100
Roof Structur	03	GABLE/HIP 100
Roof Cover	12	MODULAR MT 100
Interior Wall	05	DRYWALL 100
Interior Floo	12	HARDWOOD 70
Interior Floo	14	CARPET 30
Air Condition	03	CENTRAL 100
Heating Type	04	AIR DUCTED 100
Bedrooms		3 100
Bathrooms		2.5 100
Frame	02	WOOD FRAME 100
Stories	2.	2. 100
Units		0 100
BUD8 Adjustme	05	DIST 1A 100
Occupancy	00	NONE 100
Quality	04	Quality Level 04
DOR CODE	0100	SINGLE FAMILY
MAP NUM		MKT AREA 10
NEIGHBORHOOD/LOC	10001.00	

AREA TYPE	TOTAL GROSS AREA	PCT OF BASE	TOT ADJ AREA	SUBAREA MARKET VALUE
BAS	1,566	100	1,566	211,943
DCK	32	10	3	406
DCK	333	10	33	4,466
FOP	70	30	21	2,842
FSP	288	40	115	15,564
FUS	688	100	688	93,114
UGR	528	45	238	32,211
TOTALS	3,505		2,664	360,545

MARKET ADJUSTMENTS

TYPE	MDL	EFF. AREA	TOT ADJ PTS	EFF. BASE RATE	REPL. COST NEW	AYB	EYB	ECON	FNCT		NORM	% COND
0500	01	2,664	113.4000	161.60	430,502	1980	1985	0	0	0	16.25	83.75

1 SFR CUST – 0% - 0 Heated Area: 2254 HX Base Yr

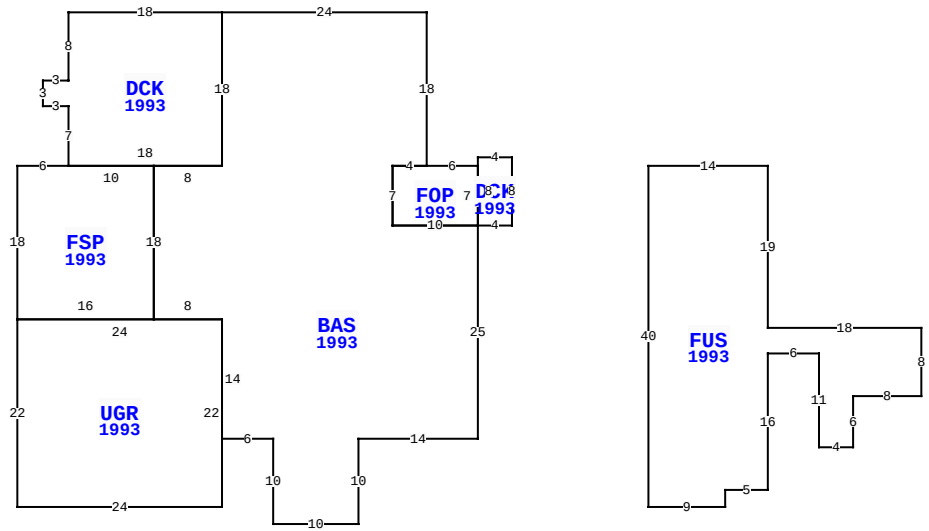

12 MARSH CREEK RD, FERNANDINA BEACH

BLD DATE		LGL DATE	
XF DATE		LAND DATE	
INC DATE		AG DATE	

NASSAU COUNTY PROPERTY

PAGE 1 of 1 5

VALUATION SUMMARY

VALUATION BY	STANDARD
Tax Group: 5	Tax Dist:
BUILDING MARKET VALUE	360,545
TOTAL MARKET OB/XF VALUE	10,408
TOTAL LAND VALUE - MARKET	450,000
TOTAL MARKET VALUE	820,953
SOH/AGL Deduction	187,598
ASSESSED VALUE	633,355
TOTAL EXEMPTION VALUE	0
BASE TAXABLE VALUE	633,355
TOTAL JUST VALUE	820,953
NCON VALUE	0
INCOME VALUE	
PREVIOUS YEAR MKT VALUE	673,360

PERMIT NUM	DESCRIPTION	AMT	ISSUED
B22750	REMODEL	4,000	08/01/2009
0149	REPAIR/RRF	4,940	12/01/1993

SALES DATA

OFF RECORD Number	DATE	TYPE INST	Q / U	V / I	RSN CD	SALE PRICE
2013/1092	10/28/2015	WD	U	I	37	330,000
GRANTOR: PARKS CAROLE C						
GRANTEE: 12 MARSH CREEK JCTS						
1493/1271	4/19/2007	WD	Q	I		550,000
GRANTOR: ALFORD HENRIETTE C TR						
GRANTEE: PARKS J LUKE JR & C						

BUILDING NOTES

BUILDING DIMENSIONS

FOP=[YR=1993] W6 BAS=[YR=1993] N18 W24 DCK=[YR=1993] W18 S8 W3 S3 E3 S7 FSP=[YR=1993] W6 S18 UGR=[YR=1993] S22 E24 N22 W24$ E16 N18 W10$ E18 N18$ S18 W8 S18 E8 S14 E6 S10 E10 N10 E14 N25 W10 N7 E4$ W4 S7 E10 DCK=[YR=1993] E4 N8 W4 S8$ N7$ PTR=E20 FUS=[YR=1993] E14 S19 E18 S8 W8 S6 W4 N11 W6 S16 W5 S2 W9 N40$ W20$.

EXTRA FEATURES

LN	OB/XF CODE	DESCRIPTION	BLD	CAP	L	W	UNITS	UT	Adj R	ADJ UNIT PRICE	ORIG COND	YEAR ON	YEAR ACTUAL	Q	% COND	OB/XF MKT VALUE	NOTES
1	0504	FP-ELECTRI	0	0	0	0	1.00	UT	2,000.00	2,000.00	100	1980	1980	3	49	980	
2	0803	ASPHALT C	0	0	0	0	1,016.00	SF	2.00	2.00	100	1980	1980	3	50	1,016	
3	0850	PEBBLE WLK	0	0	71	3	213.00	SF	3.50	3.50	100	1980	1980	3	35	261	
5	0811	CONCRETE B	0	0	0	0	1,650.00	SF	5.20	5.20	100	2014	2014	3	95	8,151	

LAND DESCRIPTION

TOTAL OB/XF 10,408

LN	USE CODE	CLS	LAND USE DESCRIPTION	CAP	RD	LOC ZONE	FRONT	DEPTH	TOT LND UTS	UNIT TYPE	DT	DPTH FACT	% COND	TOT ADJ	UNIT PRICE	ADJ UNIT PRICE	LAND VALUE	OTHER ADJUSTMENTS AND NOTES	YEAR	DENSITY	DECL	FRZ	YR	CONSRV
1	000100	C	SFR	0		RS-1	0.00	0.00	1.00	LT		1.00	1.00	1.00	450,000.00	450,000.00	450,000							

REVIEW DATE 02/19/2015 BY DJ Total Acres: 0.00 Total Land Value: 450,000 Market: 0 Agricultural: 0 Common: 450,000 PRINTED 08/02/2023 BY SYS