LOT 19
IN OR 473 PG 764
MARSH CREEK VLG UNIT 1 PB 4/18

BIERMAN JOAN A
21 PAINTED BUNTING
FERNANDINA BEACH, FL 32034

2023

01-6N-29-1300-0019-0000

BUILDING CHARACTERISTICS

ELEMENT	CD	CONSTRUCTION
Exterior Wall	12	CEDAR 100
Roof Structur	08	IRREGULAR 100
Roof Cover	03	COMP SHNGL 100
Interior Wall	05	DRYWALL 100
Interior Floo	14	CARPET 60
Interior Floo	12	HARDWOOD 40
Air Condition	03	CENTRAL 100
Heating Type	04	AIR DUCTED 100
Bedrooms		3 100
Bathrooms		4.5 100
Frame	02	WOOD FRAME 100
Stories	2.	2. 100
Units		0 100
BUD8 Adjustme	05	DIST 1A 100
Occupancy	00	NONE 100
Quality	04	Quality Level 04
DOR CODE	0100	SINGLE FAMILY
MAP NUM		MKT AREA 10
NEIGHBORHOOD/LOC	10001.00	

AREA TYPE	TOTAL GROSS AREA	PCT OF BASE	TOT ADJ AREA	SUBAREA MARKET VALUE
BAS	1,293	100	1,293	161,944
BAS	2,096	100	2,096	262,517
BAS	77	100	77	9,644
BAS	140	100	140	17,535
FGR	696	55	383	47,969
FOP	25	30	8	1,002
FOP	180	30	54	6,763
FOP	180	30	54	6,763
PTO	162	5	8	1,002
UOP	232	20	46	5,761
TOTALS	5,081		4,159	520,902

MARKET ADJUSTMENTS

TYPE	MDL	EFF. AREA	TOT ADJ PTS	EFF. BASE RATE	REPL. COST NEW	AYB	EYB	ECON	FNCT		NORM	% COND
0500	01	4,159	107.1840	152.74	635,246	1986	1986	0	0	0	18.00	82.00

1 SFR CUST - 100% - 1987 Heated Area: 3606 HX Base Yr 1987

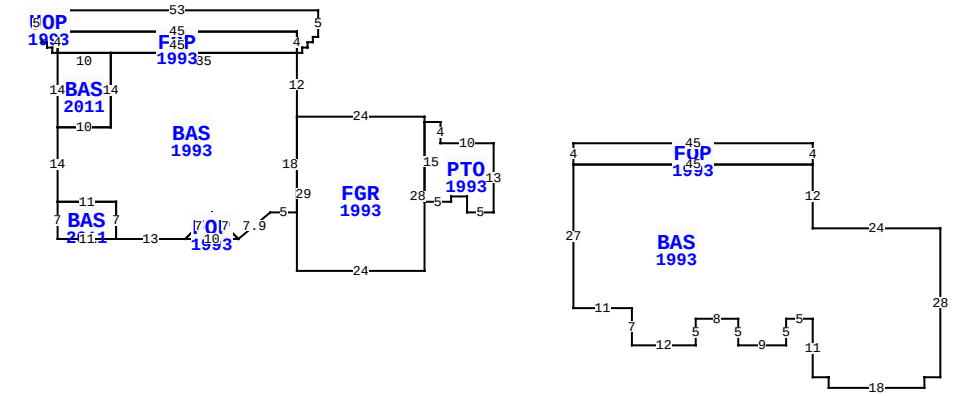

21 PAINTED BUNTING, FERNANDINA BEACH

BLD DATE		LGL DATE	
XF DATE		LAND DATE	
INC DATE		AG DATE	

NASSAU COUNTY PROPERTY

PAGE 1 of 1 5

VALUATION SUMMARY

VALUATION BY		STANDARD
Tax Group: 5	Tax Dist:	
BUILDING MARKET VALUE		520,902
TOTAL MARKET OB/XF VALUE		8,292
TOTAL LAND VALUE - MARKET		600,000
TOTAL MARKET VALUE		1,129,194
SOH/AGL Deduction		625,572
ASSESSED VALUE		503,622
TOTAL EXEMPTION VALUE	DX HX HB WX	60,000
BASE TAXABLE VALUE		443,622
TOTAL JUST VALUE		1,129,194
NCON VALUE		0
INCOME VALUE		
PREVIOUS YEAR MKT VALUE		792,606

PERMIT NUM	DESCRIPTION	AMT	ISSUED

SALES DATA

OFF RECORD Number	DATE	TYPE INST	Q / U	V / I	RSN CD	SALE PRICE
0473/0764	11/19/1985	WD	U	I	06	0
GRANTOR: BIERMAN DANIEL P & JO						
GRANTEE: BIERMAN DANIEL P &						
0337/0005	5/01/1981	WD	Q	V		25,500
GRANTOR:						
GRANTEE:						

BUILDING NOTES

BUILDING DIMENSIONS

PTO=[YR=1993] W10 N4 W3 FGR=[YR=1993] N1 W24 BAS=[YR=1993] N12 UOP=[YR=1993] E1 N1 E1 N1 E1 N1 E1 N5 W53 S5 E1 S1 E1 S1 E1 S1 E1 N4 E45 S4 $ FOP=[YR=1993] N4 W45 S4 E45 $ W35 BAS=[YR=2011] W10 S14 E10 N14$ S14 W10 S14 BAS=[YR=2011] S7 E11 N7 W11 $ E11 S7 E13 FOP=[YR=1993] E10 U5 L5 L5 D5 $ U5 R5 R5 D5 U5 R6 E5 N18 $ S29 E24 N28 $ S15 E5 N1 E3 S3 E5 N13 $ PTR= E15 FOP=[YR=1993] E45 S4 BAS=[YR=1993] S12 E24 S28 W3S2 W18 N2 W3 N11 W5 S5 W9 N5 W8 S5 W12 N7 W11 N27 E45 $ W45N4 $ W15 $.

EXTRA FEATURES

LN	OB/XF CODE	DESCRIPTION	BLD	CAP	L	W	UNITS	UT	Adj R	ADJ UNIT PRICE	ORIG COND	YEAR ON	YEAR ACTUAL	Q	% COND	OB/XF MKT VALUE	NOTES
1	1100	VAC SYSTEM	0	100	0	0	1.00	UT	800.00	800.00	100	1986	1986	3	20	160	
2	0504	FP-ELECTRI	0	100	0	0	1.00	UT	2,000.00	2,000.00	100	1986	1986	3	62	1,240	
3	0812	CONCRETE C	0	100	0	0	1,516.00	SF	4.00	4.00	100	1986	1986	3	52	3,153	
4	1125	CB/STC 6"	0	100	0	0	294.00	SF	7.35	7.35	100	1986	1986	3	52	1,124	
5	0825	BRICK	0	100	0	0	252.00	SF	12.50	12.50	100	1986	1986	3	83	2,615	

LAND DESCRIPTION

TOTAL OB/XF 8,292

LN	USE CODE	CLS	LAND USE DESCRIPTION	CAP	RD	LOC ZONE	FRONT	DEPTH	TOT LND UTS	UNIT TYPE	DT	DPTH FACT	% COND	TOT ADJ	UNIT PRICE	ADJ UNIT PRICE	LAND VALUE	OTHER ADJUSTMENTS AND NOTES	YEAR	DENSITY	DECL	FRZ	YR	CONSRV
1	000140	C	SFR GOLF A	100		RS-1	0.00	0.00	1.00	LT		1.00	1.00	1.00	600,000.00	600,000.00	600,000							

REVIEW DATE 05/17/2017 BY DJX Total Acres: 0.00 Total Land Value: 600,000 Market: 0 Agricultural: 0 Common: 600,000 PRINTED 08/02/2023 BY SYS