LOT 7
IN OR 1961/1944
MARSH CREEK VILLAGE 1 PB 4/18

COBB NORMAN D & CYNTHIA GARTH
4 PAINTED BUNTING
FERNANDINA BEACH, FL 32034

2023

01-6N-29-1300-0007-0000

BUILDING CHARACTERISTICS

ELEMENT	CD	CONSTRUCTION
Exterior Wall	12	CEDAR 100
Roof Structur	03	GABLE/HIP 100
Roof Cover	03	COMP SHNGL 100
Interior Wall	05	DRYWALL 80
Interior Wall	06	CUST PANEL 20
Interior Floo	14	CARPET 70
Interior Floo	12	HARDWOOD 30
Air Condition	03	CENTRAL 100
Heating Type	04	AIR DUCTED 100
Bedrooms		3 100
Bathrooms		4 100
Frame	02	WOOD FRAME 100
Stories	2.	2. 100
Units		0 100
BUD8 Adjustme	05	DIST 1A 100
Occupancy	00	NONE 100
Quality	04	Quality Level 04
DOR CODE	0100	SINGLE FAMILY
MAP NUM		MKT AREA 10
NEIGHBORHOOD/LOC	10001.00	

AREA TYPE	TOTAL GROSS AREA	PCT OF BASE	TOT ADJ AREA	SUBAREA MARKET VALUE
BAS	1,977	100	1,977	250,102
BAS	144	100	144	18,217
FGR	624	55	343	43,391
FOP	40	30	12	1,518
FOP	154	30	46	5,819
FOP	98	30	29	3,668
FSP	300	40	120	15,181
FUS	616	100	616	77,927
SFB	208	80	166	21,000
UOP	156	20	31	3,922
TOTALS	4,759		3,572	451,879

MARKET ADJUSTMENTS

TYPE	MDL	EFF. AREA	TOT ADJ PTS	EFF. BASE RATE	REPL. COST NEW	AYB	EYB	ECON	FNCT		NORM	% COND
0500	01	3,572	110.2815	157.15	561,340	1983	1983	0	0	0	19.50	80.50

1 SFR CUST – 100% - 2016 Heated Area: 2903 HX Base Yr 2016

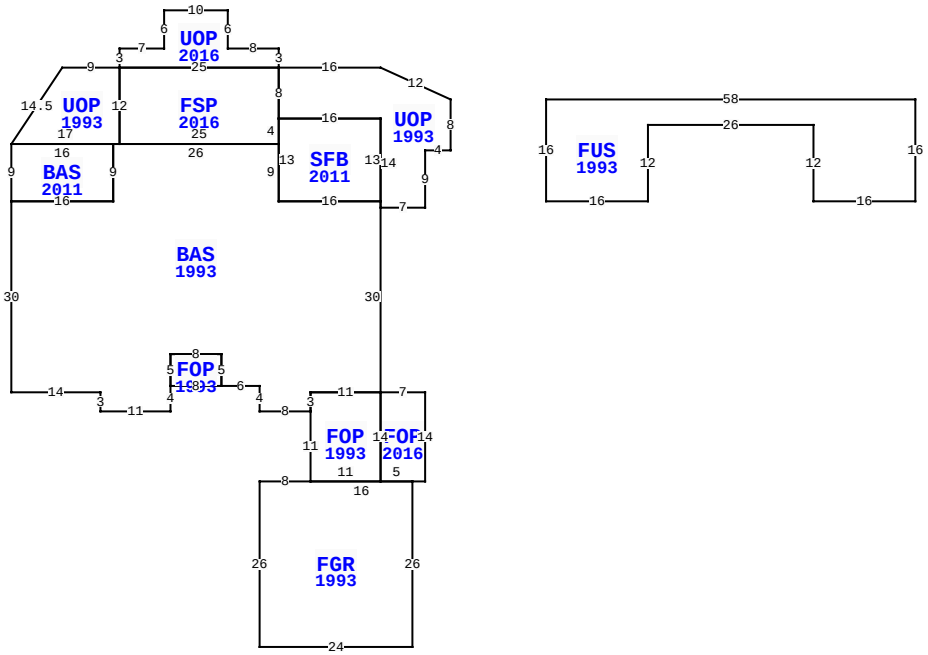

** This building has 12 Sub-Areas

4 PAINTED BUNTING, FERNANDINA BEACH

BLD DATE		LGL DATE	
XF DATE		LAND DATE	
INC DATE		AG DATE	

NASSAU COUNTY PROPERTY

PAGE 1 of 1 5

VALUATION SUMMARY

VALUATION BY		STANDARD
Tax Group: 5	Tax Dist:	
BUILDING MARKET VALUE		451,879
TOTAL MARKET OB/XF VALUE		9,416
TOTAL LAND VALUE - MARKET		600,000
TOTAL MARKET VALUE		1,061,295
SOH/AGL Deduction		460,860
ASSESSED VALUE		600,435
TOTAL EXEMPTION VALUE	HX HB	50,000
BASE TAXABLE VALUE		550,435
TOTAL JUST VALUE		1,061,295
NCON VALUE		0
INCOME VALUE		
PREVIOUS YEAR MKT VALUE		743,675

PERMIT NUM	DESCRIPTION	AMT	ISSUED
B1531307	NEW CONSTR	0	10/21/2015
R013750	REPAIR/RRF	2,000	12/01/2001
0231	ADDITION	14,600	06/01/1993

SALES DATA

OFF RECORD Number	DATE	TYPE INST	Q U	V I	RSN CD	SALE PRICE
1961/1944	2/06/2015	WD	Q	I	01	625,000
GRANTOR: GARTH RICHARD E REVOC						
GRANTEE: COBB NORMAN D & CYN						
1946/1208	10/28/2014	FJ	U	I	11	100
GRANTOR: GARTH RICHARD E EST						
GRANTEE: GARTH RICHARD E REV						

BUILDING NOTES

BUILDING DIMENSIONS

UOP=[YR=1993] U5 L11 W16 UOP=[YR=2016] N3 W8 N6 W10 S6 W7 S3 UOP=[YR=1993] W9 L8 D12 BAS=[YR=2011] S9 BAS=[YR=1993] S30 E14 S3 E11 N4 FOP=[YR=1993] E8 N5 W8 S5 $ N5 E8 S5 E6 S4 E8 FOP=[YR=1993] S11 FGR=[YR=1993] W8 S26 E24 N26 FOP=[YR=2016] E2 N14 W7 S14 E5$ W16$ E11 N14 W11 S3 $ N3 E11 N30 SFB=[YR=2011] N13 W16 FSP=[YR=2016] N8 W25 S12 E25 N4$ S13 E16$ W16 N9 W26 S9 W16 $ E16 N9 W16$ E17 N12$ E25$ S8 E16 S14 E7 N9 E4 N8$ PTR= E15 FUS=[YR=1993] E58 S16 W16 N12 W26 S12 W16 N16$ W15 $.

EXTRA FEATURES

LN	OB/XF CODE	DESCRIPTION	BLD	CAP	L	W	UNITS	UT	Adj R	ADJ UNIT PRICE	ORIG COND	YEAR ON	YEAR ACTUAL	Q	% COND	OB/XF MKT VALUE	NOTES
1	0850	PEBBLE WLK	0	100	0	0	2,170.00	SF	3.50	3.50	100	1983	1983	3	44	3,342	
2	0504	FP-ELECTRI	0	100	0	0	1.00	UT	2,000.00	2,000.00	100	1983	1983	3	56	1,120	
3	1242	WD DECK A	0	100	15	7	105.00	SF	10.00	10.00	100	1983	1983	3	20	210	
4	1126	CB/STC 8"	0	100	0	0	384.00	SF	8.00	8.00	100	1983	1983	3	44	1,352	
5	0445	BOX FNC 5'	0	100	0	0	10.00	LF	8.10	8.10	100	1983	1983	3	20	16	
6	0855	CONC PAVER	0	100	0	0	348.00	SF	10.00	10.00	100	2016	2016	3	97	3,376	

LAND DESCRIPTION

TOTAL OB/XF 9,416

LN	USE CODE	CLS	LAND USE DESCRIPTION	CAP	RD	LOC ZONE	FRONT	DEPTH	TOT LND UTS	UNIT TYPE	DT	DPTH FACT	% COND	TOT ADJ	UNIT PRICE	ADJ UNIT PRICE	LAND VALUE	OTHER ADJUSTMENTS AND NOTES	YEAR	DENSITY	DECL	FRZ	YR	CONSRV
1	000140	C	SFR GOLF A	100		RS-1	0.00	0.00	1.00	LT		1.00	1.00	1.00	600,000.00	600,000.00	600,000							

REVIEW DATE 10/18/2016 BY DJ Total Acres: 0.00 Total Land Value: 600,000 Market: 0 Agricultural: 0 Common: 600,000 PRINTED 08/02/2023 BY SYS