LOT 5
LAKEHOUSES PB 5/50 & 51

DULCHAVSKY SCOTT A & JENNIFER
3538 WINTERBERRY DR W
WEST BLOOMFIELD, MI 48324

2023

01-6N-29-1200-0005-0000

NASSAU COUNTY PROPERTY

BUILDING CHARACTERISTICS

ELEMENT	CD	CONSTRUCTION
Exterior Wall	10	ABOVE AVG 100
Roof Structur	08	IRREGULAR 100
Roof Cover	03	COMP SHNGL 100
Interior Wall	05	DRYWALL 100
Interior Floo	11	CLAY TILE 90
Interior Floo	14	CARPET 10
Air Condition	03	CENTRAL 100
Heating Type	04	AIR DUCTED 100
Bedrooms		3 100
Bathrooms		3.5 100
Frame	02	WOOD FRAME 100
Stories	1.5	1.5 100
Units		0 100
Occupancy	00	NONE 100
Quality	03	Quality Level 03

DOR CODE	0100	SINGLE FAMILY	
MAP NUM		MKT AREA	10
NEIGHBORHOOD/LOC	10001.00		

AREA TYPE	TOTAL GROSS AREA	PCT OF BASE	TOT ADJ AREA	SUBAREA MARKET VALUE
BAS	2,529	100	2,529	360,031
FGR	544	55	299	42,566
FOP	65	30	20	2,847
FOP	260	30	78	11,104
FUS	382	100	382	54,382
UOP	11	20	2	285
UOP	80	20	16	2,278
TOTALS	3,871		3,326	473,493

MARKET ADJUSTMENTS

TYPE	MDL	EFF. AREA	TOT ADJ PTS	EFF. BASE RATE	REPL. COST NEW	AYB	EYB	ECON	FNCT		NORM	% COND
0500	01	3,326	112.8840	160.86	535,020	1998	1998	0	0	0	11.50	88.50

1 SFR CUST – 0% - 2023 Heated Area: 2911 HX Base Yr

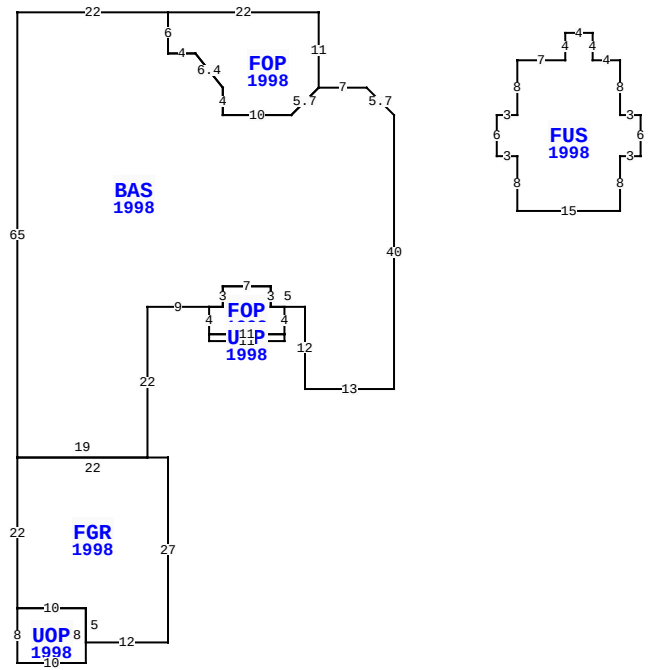

10 SEA MARSH CV, FERNANDINA BEACH

BLD DATE		LGL DATE	
XF DATE		LAND DATE	
INC DATE		AG DATE	

VALUATION SUMMARY

VALUATION BY	STANDARD
Tax Group: 5	Tax Dist:
BUILDING MARKET VALUE	473,493
TOTAL MARKET OB/XF VALUE	10,764
TOTAL LAND VALUE - MARKET	600,000
TOTAL MARKET VALUE	1,084,257
SOH/AGL Deduction	0
ASSESSED VALUE	1,084,257
TOTAL EXEMPTION VALUE	0
BASE TAXABLE VALUE	1,084,257
TOTAL JUST VALUE	1,084,257
NCON VALUE	484,257
INCOME VALUE	
PREVIOUS YEAR MKT VALUE	696,160

PERMIT NUM	DESCRIPTION	AMT	ISSUED
B9703834	NEW CONSTR	205,000	04/01/1997

SALES DATA

OFF RECORD Number	DATE	TYPE INST	Q / U	V / I	RSN CD	SALE PRICE
2570/0507	6/14/2022	QC	U	I	11	100
GRANTOR: DULCHAVSKY SCOTT A						
GRANTEE: DULCHAVSKY SCOTT A						
1934/1414	8/28/2014	WD	Q	I	01	490,000
GRANTOR: HARRISON RANDALL P						
GRANTEE: DULCHAVSKY SCOTT A						

BUILDING NOTES

EXTRA FEATURES

LN	OB/XF CODE	DESCRIPTION	BLD	CAP	L	W	UNITS	UT	Adj R	ADJ UNIT PRICE	ORIG COND	YEAR ON	YEAR ACTUAL	Q	% COND	OB/XF MKT VALUE	NOTES
1	0504	FP-ELECTRI	0	0	0	0	1.00	UT	2,000.00	2,000.00	100	1998	1998	3	83	1,660	
2	0810	CONCRETE A	0	0	0	0	1,386.00	SF	6.50	6.50	100	1998	1998	3	77	6,937	
3	0810	CONCRETE A	0	0	0	0	215.00	SF	6.50	6.50	100	1998	1998	3	77	1,076	
4	0810	CONCRETE A	0	0	0	0	218.00	SF	6.50	6.50	100	1998	1998	3	77	1,091	

BUILDING DIMENSIONS

BAS=[YR=1998] L4 U4 W7 FOP=[YR=1998] N11 W22 S6 E4 D5 R4 S4 E10 U4 R4 $ L4 D4 W10 N4 L4 U5 W4 N6 W22 S65 FGR=[YR=1998] S22 UOP=[YR=1998] S8 E10 N8 W10 $ E10 S5 E12 N27W22 $ E19 N22 E9 FOP=[YR=1998] S4 UOP=[YR=1998] S1 E11 N1 W11 $ E11 N4 W2 N3 W7 S3 W2 $ E2 N3 E7 S3 E5 S12 E13 N40 $ PTR= E15 FUS=[YR=1998] E3 N8 E7 N4 E4 S4 E4 S8 E3 S6 W3 S8 W15 N8 W3 N6 $ W15 $.

LAND DESCRIPTION

TOTAL OB/XF 10,764

LN	USE CODE	CLS	LAND USE DESCRIPTION	CAP	RD	LOC ZONE	FRONT	DEPTH	TOT LND UTS	UNIT TYPE	DT	DPTH FACT	% COND	TOT ADJ	UNIT PRICE	ADJ UNIT PRICE	LAND VALUE	OTHER ADJUSTMENTS AND NOTES	YEAR	DENSITY	DECL	FRZ	YR	CONSRV
1	000100	C	SFR	0		RS-1	0.00	0.00	1.00	LT		1.00	1.00	1.00	600,000.00	600,000.00	600,000							

REVIEW DATE 02/14/2017 BY DJX Total Acres: 0.00 Total Land Value: 600,000 Market: 0 Agricultural: 0 Common: 600,000 PRINTED 08/02/2023 BY SYS