LOT 4
IN OR 2186/1739
LAKEHOUSES PB 5/50-51

8 SEA MARSH LLC
7524 WB&A RD STE 101
GLEN BURNIE, MD 21061

2023

01-6N-29-1200-0004-0000

NASSAU COUNTY PROPERTY

BUILDING CHARACTERISTICS

ELEMENT	CD	CONSTRUCTION
Exterior Wall	16	WD FR STUC 100
Roof Structur	08	IRREGULAR 100
Roof Cover	03	COMP SHNGL 100
Interior Wall	05	DRYWALL 100
Interior Floo	14	CARPET 70
Interior Floo	11	CLAY TILE 30
Air Condition	03	CENTRAL 100
Heating Type	04	AIR DUCTED 100
Bedrooms		4 100
Bathrooms		3 100
Frame	02	WOOD FRAME 100
Stories	1.	1. 100
Units		0 100
Occupancy	00	NONE 100
Quality	04	Quality Level 04
DOR CODE	0100	SINGLE FAMILY
MAP NUM		MKT AREA 10
NEIGHBORHOOD/LOC	10001.00	

AREA TYPE	TOTAL GROSS AREA	PCT OF BASE	TOT ADJ AREA	SUBAREA MARKET VALUE
BAS	2,829	100	2,829	388,114
FGR	496	55	273	37,454
FOP	20	30	6	823
FOP	204	30	61	8,369
FOP	241	30	72	9,878
FSP	317	40	127	17,423
FST	44	55	24	3,293
UOP	8	20	2	275
UOP	10	20	2	275
TOTALS	4,169		3,396	465,902

MARKET ADJUSTMENTS

TYPE	MDL	EFF. AREA	TOT ADJ PTS	EFF. BASE RATE	REPL. COST NEW	AYB	EYB	ECON	FNCT		NORM	% COND
0500	01	3,396	110.0274	156.79	532,459	1997	1997	0	0	0	12.50	87.50

1 SFR CUST – 0% - 0 Heated Area: 2829 HX Base Yr

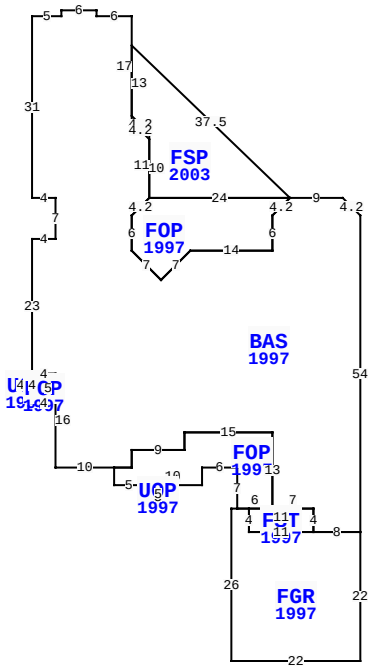

8 SEA MARSH CV, FERNANDINA BEACH

BLD DATE		LGL DATE	
XF DATE		LAND DATE	
INC DATE		AG DATE	

VALUATION SUMMARY

VALUATION BY	STANDARD
Tax Group: 5	Tax Dist:
BUILDING MARKET VALUE	465,902
TOTAL MARKET OB/XF VALUE	11,945
TOTAL LAND VALUE - MARKET	600,000
TOTAL MARKET VALUE	1,077,847
SOH/AGL Deduction	310,206
ASSESSED VALUE	767,641
TOTAL EXEMPTION VALUE	0
BASE TAXABLE VALUE	767,641
TOTAL JUST VALUE	1,077,847
NCON VALUE	0
INCOME VALUE	
PREVIOUS YEAR MKT VALUE	804,147

PERMIT NUM	DESCRIPTION	AMT	ISSUED
B0310705	REMODEL	25,000	01/01/2003
B9603161	NEW CONSTR	170,000	07/01/1996

SALES DATA

OFF RECORD Number	DATE	TYPE INST	Q U	V I	RSN CD	SALE PRICE
2186/1739	3/30/2018	QC	U	I	11	100
GRANTOR: GILLIGAN WILLIAM D &						
GRANTEE: 8 SEA MARSH LLC						
1981/0447	5/21/2015	WD	Q	I	01	625,000
GRANTOR: MUNSON ROBERT V & TOM						
GRANTEE: GILLIGAN WILLIAM D						

BUILDING NOTES

BUILDING DIMENSIONS

BAS=[YR=1997] L3 U3 W9 FSP=[YR=2003] U26 L27 S13 R3 D3 S10 FOP=[YR=1997] D3 L3 S6 R5 D5 U5 R5 E14 N6 R3 U3 W24 $ E24 $ L3 D3 S6 W14 D5 L5 U5 L5 N6 R3 U3 N11 L3 U3 N17 W6 N1 W6 S1 W5 S31 E4 S7 W4 S23 UOP1997 = W2 S4 E2 FOP=[YR=1997] S1 E4 N5 W4 S4 $ N4 $E4 S16 E10 FOP=[YR=1997] S3 E5 UOP=[YR=1997] S2 E5 N2 W5 $ E10 N3 E6 S7 FGR=[YR=1997] W1 S26 E22 N22 W8 FST=[YR=1997] N4 W11 S4 E11 $ W11 N4 W2 $ E6 N13 W15 S3 W9 S3 W3 $ E3 N3 E9 N3 E15 S13 E7S4 E8 N54 $.

EXTRA FEATURES

LN	OB/XF CODE	DESCRIPTION	BLD	CAP	L	W	UNITS	UT	Adj R	ADJ UNIT PRICE	ORIG COND	YEAR ON	YEAR ACTUAL	Q	% COND	OB/XF MKT VALUE	NOTES
1	0504	FP-ELECTRI	0	0	0	0	1.00	UT	2,000.00	2,000.00	100	1997	1997	3	81	1,620	
2	0812	CONCRETE C	0	0	0	0	1,477.00	SF	4.00	4.00	100	1997	1997	3	75	4,431	
3	0803	ASPHALT C	0	0	0	0	2,200.00	SF	2.00	2.00	100	1997	1997	3	50	2,200	
5	1126	CB/STC 8"	0	0	0	0	210.00	SF	8.00	8.00	100	1997	1997	3	75	1,260	
7	0858	SCULP CONC	0	0	0	0	195.00	SF	13.00	13.00	100	2003	2003	3	96	2,434	

LAND DESCRIPTION

TOTAL OB/XF 11,945

LN	USE CODE	CLS	LAND USE DESCRIPTION	CAP	RD	LOC ZONE	FRONT	DEPTH	TOT LND UTS	UNIT TYPE	DT	DPTH FACT	% COND	TOT ADJ	UNIT PRICE	ADJ UNIT PRICE	LAND VALUE	OTHER ADJUSTMENTS AND NOTES	YEAR	DENSITY	DECL	FRZ	YR	CONSRV
1	000100	C	SFR	0		RS-1	0.00	0.00	1.00	LT		1.00	1.00	1.00	600,000.00	600,000.00	600,000							

REVIEW DATE 02/14/2017 BY DJX Total Acres: 0.00 Total Land Value: 600,000 Market: 0 Agricultural: 0 Common: 600,000 PRINTED 08/02/2023 BY SYS