LOT 19
CEDAR POINT UNIT 2 PB 4/107

SCOTT WILLIAM E & SHELLY A
112 SEA MARSH ROAD
FERNANDINA BEACH, FL 32034

2023

01-6N-29-030B-0019-0000

NASSAU COUNTY PROPERTY

BUILDING CHARACTERISTICS

ELEMENT	CD	CONSTRUCTION
Exterior Wall	17	CB STUCCO 100
Roof Structur	08	IRREGULAR 100
Roof Cover	03	COMP SHNGL 100
Interior Wall	05	DRYWALL 100
Interior Floo	11	CLAY TILE 60
Interior Floo	14	CARPET 40
Air Condition	03	CENTRAL 100
Heating Type	04	AIR DUCTED 100
Bedrooms		4 100
Bathrooms		3 100
Frame	02	WOOD FRAME 100
Stories	1.5	1.5 100
Units		0 100
Occupancy	00	NONE 100
Quality	05	Quality Level 05
DOR CODE	0100	SINGLE FAMILY
MAP NUM		MKT AREA 10
NEIGHBORHOOD/LOC	10001.00	

AREA TYPE	TOTAL GROSS AREA	PCT OF BASE	TOT ADJ AREA	SUBAREA MARKET VALUE
BAS	2,669	100	2,669	416,388
FGR	598	55	329	51,326
FOP	52	30	16	2,496
FSP	168	40	67	10,452
FSP	146	40	58	9,049
FUS	380	100	380	59,284
SFB	289	80	231	36,038
UOP	107	20	21	3,277
UOP	121	20	24	3,745
UOP	42	20	8	1,248
TOTALS	4,750		3,839	598,918

MARKET ADJUSTMENTS

TYPE	MDL	EFF. AREA	TOT ADJ PTS	EFF. BASE RATE	REPL. COST NEW	AYB	EYB	ECON	FNCT		NORM	% COND
0500	01	3,839	114.6420	163.36	627,139	2003	2013	0	0	0	4.50	95.50

1 SFR CUST – 100% - 2021 Heated Area: 3280 HX Base Yr 2021

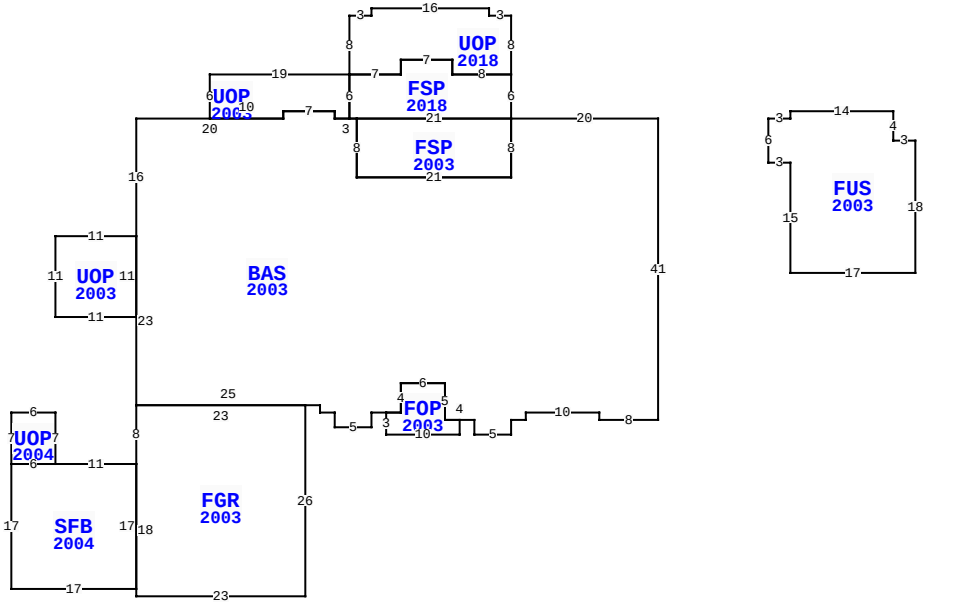

** This building has 11 Sub-Areas

112 SEA MARSH RD, FERNANDINA BEACH

BLD DATE		LGL DATE	
XF DATE		LAND DATE	
INC DATE		AG DATE	

VALUATION SUMMARY

VALUATION BY		STANDARD
Tax Group: 5	Tax Dist:	
BUILDING MARKET VALUE		598,918
TOTAL MARKET OB/XF VALUE		28,290
TOTAL LAND VALUE - MARKET		450,000
TOTAL MARKET VALUE		1,077,208
SOH/AGL Deduction		302,685
ASSESSED VALUE		774,523
TOTAL EXEMPTION VALUE	HX HB	50,000
BASE TAXABLE VALUE		724,523
TOTAL JUST VALUE		1,077,208
NCON VALUE		0
INCOME VALUE		
PREVIOUS YEAR MKT VALUE		956,309

PERMIT NUM	DESCRIPTION	AMT	ISSUED
B1810466	REMODEL	38,000	10/16/2018
B21343	REMODEL	8,000	04/01/2008
R046631	REPAIR/RRF	1,500	09/01/2004
B0310607	NEW CONSTR	227,134	01/01/2003
R034673	REPAIR/RRF	4,000	01/01/2003

SALES DATA

OFF RECORD Number	DATE	TYPE INST	Q / U	V / I	RSN CD	SALE PRICE
2350/1469	3/30/2020	WD	Q	I	02	899,000
GRANTOR: SPENCE DARLENE S & JE						
GRANTEE: SCOTT WILLIAM E & S						
2186/1794	3/23/2018	WD	Q	I	01	800,000
GRANTOR: YELK DORA J TRUSTEE O						
GRANTEE: SPENCE DARLENE S &						

BUILDING NOTES

BUILDING DIMENSIONS

BAS=[YR=2003] W20 FSP=[YR=2018] N6 UOP=[YR=2018] N8 W3 N1 W16 S1 W3 S8 UOP=[YR=2003] W19 S6 E10 N1 E7 S1 E2 N6$ E7 N2 E7 S2 E8$ W8 N2 W7 S2 W7 S6 E1 FSP=[YR=2003] S8 E21 N8 W21$E21 $ S8 W21 N8 W3 N1 W7 S1 W20 S16 UOP=[YR=2003] W11 S11 E11 N11$ S23 FGR=[YR=2003] S8 SFB=[YR=2004] W11 UOP=[YR=2004] N7 W6 S7 E6$ W6 S17 E17 N17$ S18 E23 N26 W23$ E25 S1 E2 S2 E5 N2 E2 FOP=[YR=2003] S3 E10 N2 W2 N5 W6 S4 W2$ E2 N4 E6 S5 E4 S2 E5 N2 E2 N1 E10 S1 E8 N41$ PTR=E15 FUS=[YR=2003] E3 N1 E14 S4 E3 S18 W17 N15 W3 N6 $ W15$.

EXTRA FEATURES

LN	OB/XF CODE	DESCRIPTION	BLD	CAP	L	W	UNITS	UT	Adj R	ADJ UNIT PRICE	ORIG COND	YEAR ON	YEAR ACTUAL	Q	% COND	OB/XF MKT VALUE	NOTES
1	0504	FP-ELECTRI	0	100	0	0	1.00	UT	2,000.00	2,000.00	100	2003	2003	3	88	1,760	
2	0855	CONC PAVER	0	100	0	0	2,413.00	SF	10.00	10.00	100	2003	2003	3	84	20,269	
3	0855	CONC PAVER	0	100	6	2	12.00	SF	10.00	10.00	100	2003	2003	3	84	101	
4	0855	CONC PAVER	0	100	0	0	898.00	SF	7.00	7.00	100	2018	2018	3	98	6,160	

LAND DESCRIPTION

TOTAL OB/XF 28,290

LN	USE CODE	CLS	LAND USE DESCRIPTION	CAP	RD	LOC ZONE	FRONT	DEPTH	TOT LND UTS	UNIT TYPE	DT	DPTH FACT	% COND	TOT ADJ	UNIT PRICE	ADJ UNIT PRICE	LAND VALUE	OTHER ADJUSTMENTS AND NOTES	YEAR	DENSITY	DECL	FRZ	YR	CONSRV
1	000100	C	SFR	100		RS-1	0.00	0.00	1.00	LT		1.00	1.00	1.00	450,000.00	450,000.00	450,000							

REVIEW DATE 02/04/2019 BY DJ Total Acres: 0.00 Total Land Value: 450,000 Market: 0 Agricultural: 0 Common: 450,000 PRINTED 08/02/2023 BY SYS