LOT 4
OR 332 PG 341
CEDAR POINT SUB 4/103

KENNARD JOANNA M
104 SEA MARSH RD
FERNANDINA BEACH, FL 32034

2023

01-6N-29-030A-0004-0000

BUILDING CHARACTERISTICS

ELEMENT	CD	CONSTRUCTION
Exterior Wall	16	WD FR STUC 100
Roof Structur	03	GABLE/HIP 100
Roof Cover	03	COMP SHNGL 100
Interior Wall	05	DRYWALL 100
Interior Floo	14	CARPET 50
Interior Floo	15	HARDTILE 50
Air Condition	03	CENTRAL 100
Heating Type	04	AIR DUCTED 100
Bedrooms		3 100
Bathrooms		3 100
Frame	02	WOOD FRAME 100
Stories	1.	1. 100
Units		0 100
BUD8 Adjustme	05	DIST 1A 100
Occupancy	00	NONE 100
Quality	04	Quality Level 04
DOR CODE	0100	SINGLE FAMILY
MAP NUM		MKT AREA 10
NEIGHBORHOOD/LOC	10001.00	

AREA TYPE	TOTAL GROSS AREA	PCT OF BASE	TOT ADJ AREA	SUBAREA MARKET VALUE
BAS	2,333	100	2,333	312,548
BAS	143	100	143	19,157
BAS	352	100	352	47,157
DCK	80	10	8	1,072
FGR	552	55	304	40,726
FOP	9	30	3	402
FOP	42	30	13	1,742
SFB	143	80	114	15,273
STP	3	10	0	0
STR	45	10	4	536
TOTALS	3,832		3,287	440,354

MARKET ADJUSTMENTS

TYPE	MDL	EFF. AREA	TOT ADJ PTS	EFF. BASE RATE	REPL. COST NEW	AYB	EYB	ECON	FNCT		NORM	% COND
0500	01	3,287	110.6070	157.61	518,064	1982	1992	0	0	0	15.00	85.00

1 SFR CUST - 100% - 1983 Heated Area: 2942 HX Base Yr 1983

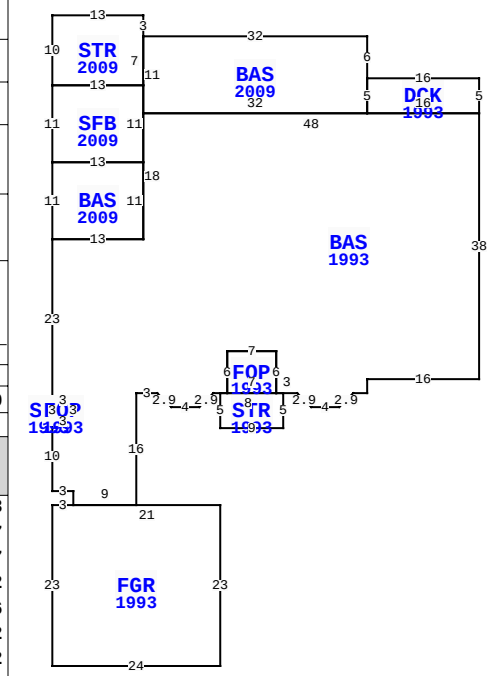

** This building has 11 Sub-Areas

104 SEA MARSH RD, FERNANDINA BEACH

BLD DATE		LGL DATE	
XF DATE		LAND DATE	
INC DATE		AG DATE	

NASSAU COUNTY PROPERTY

PAGE 1 of 1 5

VALUATION SUMMARY

VALUATION BY		STANDARD
Tax Group: 5	Tax Dist:	
BUILDING MARKET VALUE		440,354
TOTAL MARKET OB/XF VALUE		21,816
TOTAL LAND VALUE - MARKET		800,000
TOTAL MARKET VALUE		1,262,170
SOH/AGL Deduction		753,746
ASSESSED VALUE		508,424
TOTAL EXEMPTION VALUE	HX HB WX	55,000
BASE TAXABLE VALUE		453,424
TOTAL JUST VALUE		1,262,170
NCON VALUE		0
INCOME VALUE		
PREVIOUS YEAR MKT VALUE		1,064,743

PERMIT NUM	DESCRIPTION	AMT	ISSUED

SALES DATA

OFF RECORD Number	DATE	TYPE INST	Q / U	V / I	RSN CD	SALE PRICE
0332/0341	3/01/1981	WD	Q	V		59,500

GRANTOR:

GRANTEE:

BUILDING NOTES

BUILDING DIMENSIONS

DCK=[YR=1993] W16 BAS=[YR=2009] N6 W32 STR=[YR=2009] N3 W13 S10 SFB=[YR=2009] S11 BAS=[YR=2009] S11 BAS=[YR=1993] S23 STP=[YR=1993] W1S3E1N3$ FOP=[YR=1993] S3 E3N3W3$ E3S3W3 S10 E3 S2 FGR=[YR=1993] W3 S23 E24 N23 W21$ E9 N16 E3 D2 R2 E4 U2 R2 E1 STR=[YR=1993] S5 E9 N5 W1 FOP=[YR=1993] N6 W7 S6 E7$ W8$ E1 N6 E7 S6 E3 D2 R2 E4 U2 R2 E2 N2 E16 N38 W48 S18 W13$ E13 N11 W13$ E13 N11 W13$ E13 N7$ S11 E32 N5$ S5 E16 N5$.

EXTRA FEATURES

LN	OB/XF CODE	DESCRIPTION	BLD	CAP	L	W	UNITS	UT	Adj R	ADJ UNIT PRICE	ORIG COND	YEAR ON	YEAR ACTUAL	Q	% COND	OB/XF MKT VALUE	NOTES
1	0855	CONC PAVER	0	100	0	0	2,739.00	SF	7.00	7.00	100	2017	2017	3	97	18,598	
2	0504	FP-ELECTRI	0	100	0	0	1.00	UT	2,000.00	2,000.00	100	1982	1982	3	54	1,080	
3	0855	CONC PAVER	0	100	0	0	228.00	SF	7.00	7.00	100	2017	2017	3	97	1,548	
4	0835	QUARY TILE	0	100	0	0	100.00	SF	10.00	10.00	100	1982	1982	3	41	410	
5	1126	CB/STC 8"	0	100	0	0	55.00	SF	8.00	8.00	100	1982	1982	3	41	180	

LAND DESCRIPTION

TOTAL OB/XF 21,816

LN	USE CODE	CLS	LAND USE DESCRIPTION	CAP	RD	LOC ZONE	FRONT	DEPTH	TOT LND UTS	UNIT TYPE	DT	DPTH FACT	% COND	TOT ADJ	UNIT PRICE	ADJ UNIT PRICE	LAND VALUE	OTHER ADJUSTMENTS AND NOTES	YEAR	DENSITY	DECL	FRZ	YR	CONSRV
1	000116	C	SFR MARSH	100		RS-1	0.00	0.00	1.00	LT		1.00	1.00	1.00	800,000.00	800,000.00	800,000							

REVIEW DATE 04/23/2020 BY DJA Total Acres: 0.00 Total Land Value: 800,000 Market: 0 Agricultural: 0 Common: 800,000 PRINTED 08/02/2023 BY SYS