LOT 3
IN OR 1082/1791
CEDAR POINT SUB PB 4/103

HAAS THOMAS/HAAS JULIANNE
102 SEA MARSH RD
FERNANDINA BEACH, FL 32034

2023

01-6N-29-030A-0003-0000

NASSAU COUNTY PROPERTY

BUILDING CHARACTERISTICS

ELEMENT	CD	CONSTRUCTION
Exterior Wall	10	ABOVE AVG 100
Roof Structur	03	GABLE/HIP 100
Roof Cover	03	COMP SHNGL 100
Interior Wall	05	DRYWALL 100
Interior Floo	11	CLAY TILE 50
Interior Floo	14	CARPET 50
Air Condition	03	CENTRAL 100
Heating Type	04	AIR DUCTED 100
Bedrooms		3 100
Bathrooms		3 100
Frame	02	WOOD FRAME 100
Stories	1.	1. 100
Units		0 100
BUD8 Adjustme	05	DIST 1A 100
Occupancy	00	NONE 100
Quality	04	Quality Level 04
DOR CODE	0100	SINGLE FAMILY
MAP NUM		MKT AREA 10
NEIGHBORHOOD/LOC	10001.00	

AREA TYPE	TOTAL GROSS AREA	PCT OF BASE	TOT ADJ AREA	SUBAREA MARKET VALUE
BAS	2,946	100	2,946	377,023
FGR	666	55	366	46,840
FOP	100	30	30	3,840
FOP	158	30	47	6,015
PTO	82	5	4	512
UOP	44	20	9	1,152
UOP	747	20	149	19,068
UOP	8	20	2	256
UOP	44	20	9	1,152
UOP	182	20	36	4,607
TOTALS	4,977		3,598	460,464

MARKET ADJUSTMENTS

TYPE	MDL	EFF. AREA	TOT ADJ PTS	EFF. BASE RATE	REPL. COST NEW	AYB	EYB	ECON	FNCT		NORM	% COND
0500	01	3,598	108.2025	154.19	554,776	1982	1982	0	0	0	17.00	83.00

1 SFR CUST – 100% - 1998 Heated Area: 2946 HX Base Yr 1998

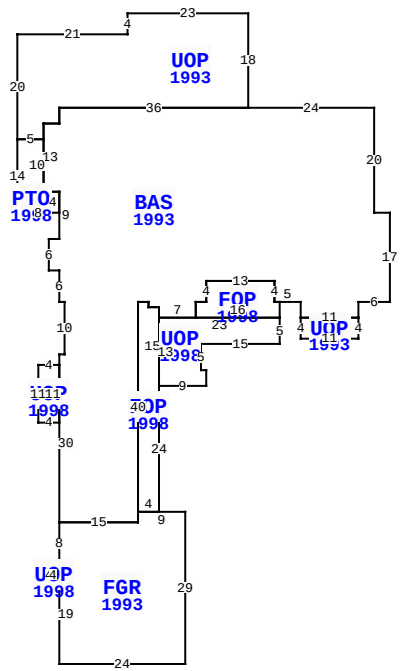

102 SEA MARSH RD, FERNANDINA BEACH

BLD DATE		LGL DATE	
XF DATE		LAND DATE	
INC DATE		AG DATE	

VALUATION SUMMARY

VALUATION BY		STANDARD
Tax Group: 5	Tax Dist:	
BUILDING MARKET VALUE		460,464
TOTAL MARKET OB/XF VALUE		28,479
TOTAL LAND VALUE - MARKET		800,000
TOTAL MARKET VALUE		1,288,943
SOH/AGL Deduction		686,521
ASSESSED VALUE		602,422
TOTAL EXEMPTION VALUE	HX HB	50,000
BASE TAXABLE VALUE		552,422
TOTAL JUST VALUE		1,288,943
NCON VALUE		0
INCOME VALUE		
PREVIOUS YEAR MKT VALUE		1,088,375

PERMIT NUM	DESCRIPTION	AMT	ISSUED
B9804618	REMODEL	129,700	01/01/1998

SALES DATA

OFF RECORD Number	DATE	TYPE INST	Q / U	V / I	RSN CD	SALE PRICE
1082/1791	9/26/2002	WD	U	I	01	210,300
GRANTOR: HAAS JULIANNE M						
GRANTEE: HAAS THOMAS J & JUL						
0808/1905	10/07/1997	WD	Q	I		460,000
GRANTOR: GOWENS MARGARET B & D						
GRANTEE: HAAS JULIANNE M						

BUILDING NOTES

BUILDING DIMENSIONS

BAS=[YR=1993] W24 UOP=[YR=1993] N18 W23 S4 W21 S20PTO=[YR=1998] S14 E8 N4 W3 N10 W5 $ E5 N3 E3 N3 E36 $ W36 S3 W3 S13 E3 S9 W2 S6 E2 S6 E1 S10 W1 S2 UOP=[YR=1998] W4 S11 E4 N11 $ S30 FGR=[YR=1993] S8 UOP=[YR=1998] W2 S4 E2 N4 $ S19 E24 N29 W9 S2 W15 $ E15 N2 FOP=[YR=1998] E4 N24 UOP=[YR=1998] E9 N3 W1 N5 E15 N5 FOP=[YR=1998] N3 W1 N4 W13 S4 W2 S3 E16 $ W23 S13 $ N15 W2 N1 W2 S40 $ N40 E2 S1 E2 S2 E7 N3 E2 N4 E13 S4 E5 S3 UOP=[YR=1993] S4 E11 N4 W11 $ E11 N3 E6 N17 W3 N20 $.

EXTRA FEATURES

LN	OB/XF CODE	DESCRIPTION	BLD	CAP	L	W	UNITS	UT	Adj R	ADJ UNIT PRICE	ORIG COND	YEAR ON	YEAR ACTUAL	Q	% COND	OB/XF MKT VALUE	NOTES
1	0850	PEBBLE WLK	0	100	0	0	3,515.00	SF	3.50	3.50	100	1982	1982	3	41	5,044	
2	0504	FP-ELECTRI	0	100	0	0	1.00	UT	2,000.00	2,000.00	100	1982	1982	3	54	1,080	
3	0861	POOL GUNIT	0	100	0	0	529.00	SF	85.00	85.00	100	1982	1982	3	20	8,993	
4	0810	CONCRETE A	0	100	12	4	48.00	SF	6.50	6.50	100	1982	1982	3	41	128	
5	0825	BRICK	0	100	0	0	119.00	SF	12.50	12.50	100	1982	1982	3	79	1,175	
6	0810	CONCRETE A	0	100	0	0	42.00	SF	6.50	6.50	100	1982	1982	3	41	112	
7	0463	FENCE GATE	0	100	0	0	2.00	UT	300.00	300.00	100	1990	1990	3	28	168	
8	0450	PREFAB FNC	0	100	0	0	76.00	LF	8.00	8.00	100	1990	1990	3	20	122	
9	1126	CB/STC 8"	0	100	0	0	571.00	SF	8.00	8.00	100	1982	1982	3	41	1,873	
10	0857	SANDSTONE	0	100	0	0	624.00	SF	16.00	16.00	100	2013	2013	3	98	9,784	

TOTAL OB/XF 28,479

LAND DESCRIPTION

LN	USE CODE	CLS	LAND USE DESCRIPTION	CAP	RD	LOC ZONE	FRONT	DEPTH	TOT LND UTS	UNIT TYPE	DT	DPTH FACT	% COND	TOT ADJ	UNIT PRICE	ADJ UNIT PRICE	LAND VALUE	OTHER ADJUSTMENTS AND NOTES	YEAR	DENSITY	DECL	FRZ	YR	CONSRV
1	000116	C	SFR MARSH	100		RS-1	0.00	0.00	1.00	LT		1.00	1.00	1.00	800,000.00	800,000.00	800,000							

REVIEW DATE 02/14/2017 BY DJ Total Acres: 0.00 Total Land Value: 800,000 Market: 0 Agricultural: 0 Common: 800,000 PRINTED 08/02/2023 BY SYS