LOT 1
CEDAR POINT SUB PB 4/103

DARNELL LEIANN
20335 ALLEGRO SHORES LN
HUMBLE, TX 77346

2023

01-6N-29-030A-0001-0000

NASSAU COUNTY PROPERTY

BUILDING CHARACTERISTICS

ELEMENT	CD	CONSTRUCTION
Exterior Wall	12	CEDAR 80
Exterior Wall	17	CB STUCCO 20
Roof Structur	08	IRREGULAR 100
Roof Cover	03	COMP SHNGL 100
Interior Wall	08	DECORATIVE 70
Interior Wall	05	DRYWALL 30
Interior Floo	12	HARDWOOD 90
Interior Floo	19	MARBLE 10
Air Condition	03	CENTRAL 100
Heating Type	04	AIR DUCTED 100
Bedrooms		3 100
Bathrooms		3.5 100
Frame	02	WOOD FRAME 100
Stories	2.	2. 100
Units		0 100
BUD8 Adjustme	05	DIST 1A 100
Occupancy	00	NONE 100
Quality	01	Quality Level 01
DOR CODE	0100	SINGLE FAMILY
MAP NUM		MKT AREA 10
NEIGHBORHOOD/LOC	10001.00	

AREA TYPE	TOTAL GROSS AREA	PCT OF BASE	TOT ADJ AREA	SUBAREA MARKET VALUE
BAS	2,676	100	2,676	244,803
BAS	75	100	75	6,861
BAS	1,075	100	1,075	98,342
DCK	1,057	10	106	9,697
FGR	658	55	362	33,116
FOP	40	30	12	1,098
FOP	80	30	24	2,195
FOP	174	30	52	4,757
FSP	256	40	102	9,331
FUS	915	100	915	83,705
TOTALS	7,442		5,835	533,791

MARKET ADJUSTMENTS

TYPE	MDL	EFF. AREA	TOT ADJ PTS	EFF. BASE RATE	REPL. COST NEW	AYB	EYB	ECON	FNCT	AP	NORM	% COND
0500	01	5,835	103.5405	147.55	860,954	1986	1986	0	0	20	18.00	62.00

1 SFR CUST - 0% - 0 Heated Area: 5177 HX Base Yr

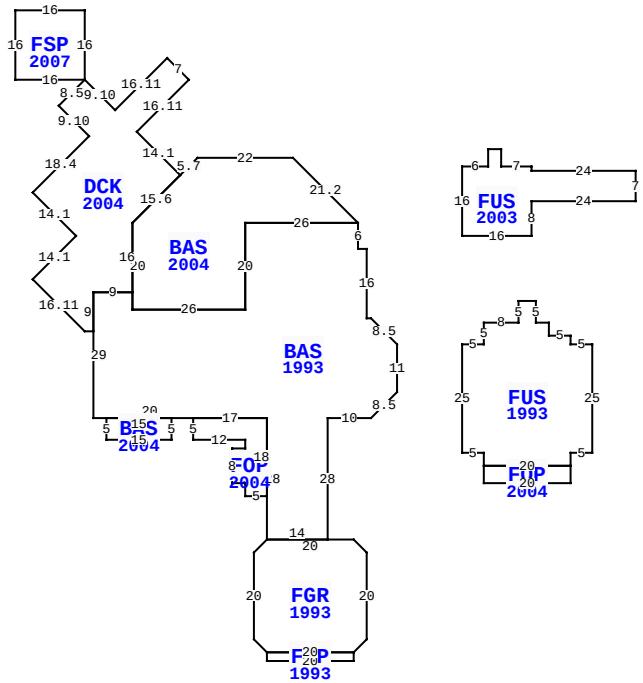

** This building has 11 Sub-Areas

98 SEA MARSH RD, FERNANDINA BEACH

BLD DATE	04/24/2008 DJ	LGL DATE
XF DATE		LAND DATE
INC DATE		AG DATE

VALUATION SUMMARY

VALUATION BY	STANDARD
Tax Group: 5	Tax Dist:
BUILDING MARKET VALUE	533,791
TOTAL MARKET OB/XF VALUE	36,141
TOTAL LAND VALUE - MARKET	800,000
TOTAL MARKET VALUE	1,369,932
SOH/AGL Deduction	188,653
ASSESSED VALUE	1,181,279
TOTAL EXEMPTION VALUE	0
BASE TAXABLE VALUE	1,181,279
TOTAL JUST VALUE	1,369,932
NCON VALUE	0
INCOME VALUE	
PREVIOUS YEAR MKT VALUE	1,073,890

PERMIT NUM	DESCRIPTION	AMT	ISSUED
B18721	REMODEL	7,450	10/31/2006
B018256	ADDITION	0	05/07/2001

SALES DATA

OFF RECORD Number	DATE	TYPE INST	Q / U	V / I	RSN CD	SALE PRICE
2442/1347	3/08/2021	PR	U	I	11	100
GRANTOR: DARNELL LEIANN P/R OF						
GRANTEE: DARNELL LEIANN						
2116/1961	5/01/2017	WD	Q	I	01	1,000,000
GRANTOR: 98 SEA MARSH LLC						
GRANTEE: BOWMAN NEIL O & GWE						

BUILDING NOTES

BUILDING DIMENSIONS

BAS=[YR=1993] L6 U6 W1N16W2N6 BAS=[YR=2004] U15 L15 W22 D4 L4 DCK=[YR=2004] U10 L10 U12 R12 U5 L5 D12 L12 U7 L7 FSP=[YR=2007] N16 W16 S16 E16$ L6 D6 D7 R7 L13 D13 D10 R10 D10 L10 D12 R12 E2 N9E9N16 U11 R11 $ D11 L11 S20E26 N20E26$W26S20W26N4 W9 S29 E3 BAS=[YR=2004] S5 E15 N5 W15 $ E20 FOP=[YR=2004] S5 E12 S2 W3 S8 E3 S3 E5 N18 W17$ E17 S28 FGR=[YR=1993] D3 L3 S20 R3 D3 FOP=[YR=1993] S2 E20 N2 W20 $ E20 U3 R3 N20 L3 U3 W20 $ E14 N28 E10 U6 R6 N11 $ PTR= E15 FUS=[YR=1993] E5 N5 E8 N5 E4 S5 E3 S3 E5 S2 E5 S25 W5 S3 FOP=[YR=2004] S4 W20 N4 E20 $ W20 N3 W5 N25 $ W15 $ PTR= E15 N25 FUS=[YR=2003] N16 E6 N4 E3 S4 E7 S1 E24 S7 W24 S8 W16 $ W15 S25 $.

EXTRA FEATURES

LN	OB/XF CODE	DESCRIPTION	BLD	CAP	L	W	UNITS	UT	Adj R	ADJ UNIT PRICE	ORIG COND	YEAR ON	YEAR ACTUAL	Q	% COND	OB/XF MKT VALUE	NOTES
1	0504	FP-ELECTRI	0	0	0	0	1.00	UT	2,000.00	2,000.00	100	1986	1986	3	62	1,240	
5	0855	CONC PAVER	0	0	0	0	2,876.00	SF	10.00	10.00	100	2002	2002	3	83	23,871	
6	0855	CONC PAVER	0	0	0	0	1,217.00	SF	10.00	10.00	100	2002	2002	3	83	10,101	
7	0810	CONCRETE A	0	0	0	0	109.00	SF	6.50	6.50	100	1993	1993	3	68	482	
8	1126	CB/STC 8"	0	0	0	0	76.00	SF	8.00	8.00	100	1993	1993	3	68	413	
9	1242	WD DECK A	0	0	0	0	16.00	SF	10.00	10.00	100	2002	2002	3	21	34	

LAND DESCRIPTION

TOTAL OB/XF 36,141

LN	USE CODE	CLS	LAND USE DESCRIPTION	CAP	RD	LOC ZONE	FRONT	DEPTH	TOT LND UTS	UNIT TYPE	DT	DPTH FACT	% COND	TOT ADJ	UNIT PRICE	ADJ UNIT PRICE	LAND VALUE	OTHER ADJUSTMENTS AND NOTES	YEAR	DENSITY	DECL	FRZ	YR	CONSRV
1	000116	C	SFR MARSH	0		RS-1	0.00	0.00	1.00	LT		1.00	1.00	1.00	800,000.00	800,000.00	800,000							

REVIEW DATE 08/18/2017 BY DJ Total Acres: 0.00 Total Land Value: 800,000 Market: 0 Agricultural: 0 Common: 800,000 PRINTED 08/02/2023 BY SYS