LOT 71
IN OR 1350/527
SEA MARSH VILLAGE #2 PBK 4/16

PETRO MICHAEL J
81 SEA MARSH RD
FERNANDINA BEACH, FL 32034

2023

01-6N-29-0300-0071-0000

BUILDING CHARACTERISTICS

ELEMENT	CD	CONSTRUCTION
Exterior Wall	12	CEDAR 100
Roof Structur	08	IRREGULAR 100
Roof Cover	03	COMP SHNGL 100
Interior Wall	05	DRYWALL 90
Interior Wall	08	DECORATIVE 10
Interior Floo	12	HARDWOOD 50
Interior Floo	15	HARDTILE 50
Air Condition	03	CENTRAL 100
Heating Type	04	AIR DUCTED 100
Bedrooms		3 100
Bathrooms		3 100
Frame	02	WOOD FRAME 100
Stories	1.	1. 100
Units		0 100
BUD8 Adjustme	05	DIST 1A 100
Occupancy	00	NONE 100
Quality	04	Quality Level 04
DOR CODE	0100	SINGLE FAMILY
MAP NUM		MKT AREA 10
NEIGHBORHOOD/LOC	10001.00	

AREA TYPE	TOTAL GROSS AREA	PCT OF BASE	TOT ADJ AREA	SUBAREA MARKET VALUE
BAS	3,467	100	3,467	470,313
FGR	602	55	331	44,901
FOP	70	30	21	2,849
FOP	45	30	14	1,899
FSP	108	40	43	5,833
FSP	209	40	84	11,395
FST	18	55	10	1,357
FST	30	55	16	2,171
PTO	35	5	2	271
PTO	59	5	3	407
TOTALS	4,952		4,023	545,737

MARKET ADJUSTMENTS

TYPE	MDL	EFF. AREA	TOT ADJ PTS	EFF. BASE RATE	REPL. COST NEW	AYB	EYB	ECON	FNCT		NORM	% COND
0500	01	4,023	111.3420	158.66	638,289	1984	1993	0	0	0	14.50	85.50

1 SFR CUST – 100% - 2019 Heated Area: 3467 HX Base Yr 2019

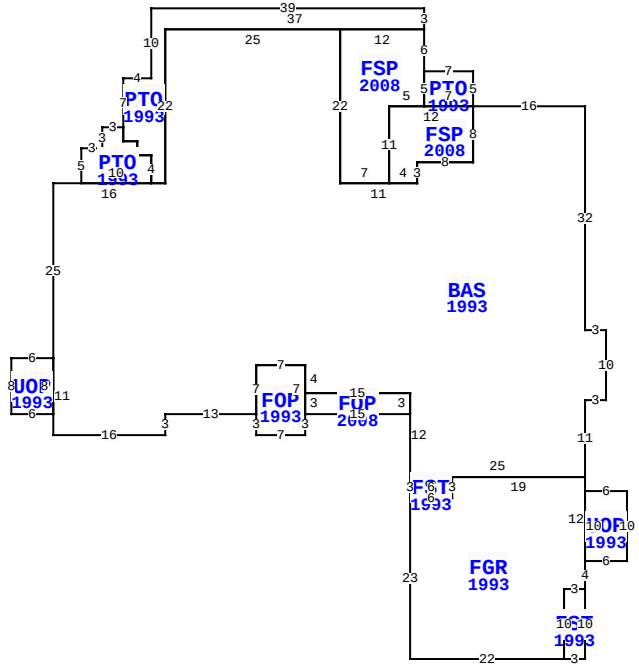

** This building has 13 Sub-Areas

81 SEA MARSH RD, FERNANDINA BEACH

BLD DATE		LGL DATE	
XF DATE		LAND DATE	
INC DATE		AG DATE	

NASSAU COUNTY PROPERTY

PAGE 1 of 1 5

VALUATION SUMMARY

VALUATION BY		STANDARD
Tax Group: 5	Tax Dist:	
BUILDING MARKET VALUE		545,737
TOTAL MARKET OB/XF VALUE		12,819
TOTAL LAND VALUE - MARKET		600,000
TOTAL MARKET VALUE		1,158,556
SOH/AGL Deduction		492,121
ASSESSED VALUE		666,435
TOTAL EXEMPTION VALUE	HX HB	50,000
BASE TAXABLE VALUE		616,435
TOTAL JUST VALUE		1,158,556
NCON VALUE		0
INCOME VALUE		
PREVIOUS YEAR MKT VALUE		814,213

PERMIT NUM	DESCRIPTION	AMT	ISSUED
B20961	ADDITION	8,000	01/01/2008
B9603281	REPAIR/RRF	5,000	09/01/1996

SALES DATA

OFF RECORD Number	DATE	TYPE INST	Q U	V I	RSN CD	SALE PRICE
1350/0527	9/15/2005	WD	Q	I		740,000
GRANTOR: MCALLISTER WM A JR &						
GRANTEE: PETRO MICHAEL J						
0752/0194	2/22/1996	WD	Q	I		336,500
GRANTOR: ALLEN HARLAN G JR & L						
GRANTEE: MCALLISTER WM A JR						

BUILDING NOTES

EXTRA FEATURES

LN	OB/XF CODE	DESCRIPTION	BLD	CAP	L	W	UNITS	UT	Adj R	ADJ UNIT PRICE	ORIG COND	YEAR ON	YEAR ACTUAL	Q	% COND	OB/XF MKT VALUE	NOTES
1	0504	FP-ELECTRI	0	100	0	0	1.00	UT	2,000.00	2,000.00	100	1984	1984	3	58	1,160	
2	0850	PEBBLE WLK	0	100	0	0	1,447.00	SF	3.50	3.50	100	1984	1984	3	47	2,380	
3	0444	BOX FNC 4'	0	100	0	0	31.00	LF	6.50	6.50	100	1984	1984	3	20	40	
4	0445	BOX FNC 5'	0	100	0	0	13.00	LF	8.10	8.10	100	1984	1984	3	20	21	
5	1125	CB/STC 6"	0	100	0	0	96.00	SF	7.35	7.35	100	1984	1984	3	47	332	
6	0812	CONCRETE C	0	100	0	0	2,962.00	SF	4.00	4.00	100	1997	1997	3	75	8,886	

BUILDING DIMENSIONS

BAS=[YR=1993] W16 PTO=[YR=1993] N5 W7 FSP=[YR=2008] N6 PTO=[YR=1993] N3 W39 S10 W4 S7 PTO=[YR=1993] W3 S3 W3 S5 E10 N4 W2 N2 W2 N2$ S2 E2 S2 E2 S4 E2 N22 E37$ W12 S22 E7 N11 E5 N5$ S5E7$ FSP=[YR=2008] W12 S11 E4 N3 E8 N8$ S8 W8 S3 W11 N22 W25 S22 W16 S25 UOP=[YR=1993] W6 S8 E6 N8$ S11 E16 N3 E13 FOP=[YR=1993] S3 E7 N3 FOP=[YR=2008] E15 N3 W15 S3$ N7 W7 S7$ N7 E7 S4 E15 S12 FST=[YR=1993] S3 FGR=[YR=1993] S23 E22 FST=[YR=1993] E3 N10 W3 S10$ N10 E3 N4 UOP=[YR=1993] E6 N10 W6 S10$ N12 W19S3W6$E6N3W6$ E25 N11 E3 N10 W3 N32$.

LAND DESCRIPTION

TOTAL OB/XF 12,819

LN	USE CODE	CLS	LAND USE DESCRIPTION	CAP	RD	LOC ZONE	FRONT	DEPTH	TOT LND UTS	UNIT TYPE	DT	DPTH FACT	% COND	TOT ADJ	UNIT PRICE	ADJ UNIT PRICE	LAND VALUE	OTHER ADJUSTMENTS AND NOTES	YEAR	DENSITY	DECL	FRZ	YR	CONSRV
1	000140	C	SFR GOLF A	100		RS-1	0.00	0.00	1.00	LT		1.00	1.00	1.00	600,000.00	600,000.00	600,000							

REVIEW DATE 03/13/2018 BY DJX Total Acres: 0.00 Total Land Value: 600,000 Market: 0 Agricultural: 0 Common: 600,000 PRINTED 08/02/2023 BY SYS