LOT 43
IN OR 1567/1211
SEA MARSH VILLAGE #2 PBK 4/16

MELVIN WILLIAM G & ELIZABETH B
PO BOX 16851
FERNANDINA BEACH, FL 32035

2023

01-6N-29-0300-0043-0000

BUILDING CHARACTERISTICS

ELEMENT	CD	CONSTRUCTION
Exterior Wall	10	ABOVE AVG 100
Roof Structur	08	IRREGULAR 100
Roof Cover	03	COMP SHNGL 100
Interior Wall	05	DRYWALL 100
Interior Floo	12	HARDWOOD 60
Interior Floo	14	CARPET 40
Air Condition	03	CENTRAL 100
Heating Type	04	AIR DUCTED 100
Bedrooms		3 100
Bathrooms		3.5 100
Frame	02	WOOD FRAME 100
Stories	1.5	1.5 100
Units		0 100
Occupancy	00	NONE 100
Quality	04	Quality Level 04
DOR CODE	0100	SINGLE FAMILY
MAP NUM		MKT AREA 10
NEIGHBORHOOD/LOC	10001.00	

AREA TYPE	TOTAL GROSS AREA	PCT OF BASE	TOT ADJ AREA	SUBAREA MARKET VALUE
BAS	2,277	100	2,277	335,582
FGR	840	55	462	68,089
FOP	266	30	80	11,791
FOP	323	30	97	14,295
FSP	162	40	65	9,580
FUS	680	100	680	100,218
UOP	14	20	3	443
UOP	884	20	177	26,086
TOTALS	5,446		3,841	566,083

MARKET ADJUSTMENTS

TYPE	MDL	EFF. AREA	TOT ADJ PTS	EFF. BASE RATE	REPL. COST NEW	AYB	EYB	ECON	FNCT		NORM	% COND
0500	01	3,841	107.7300	153.52	589,670	2013	2013	0	0	0	4.00	96.00

1 SFR CUST – 100% - 2014 Heated Area: 2957 HX Base Yr 2014

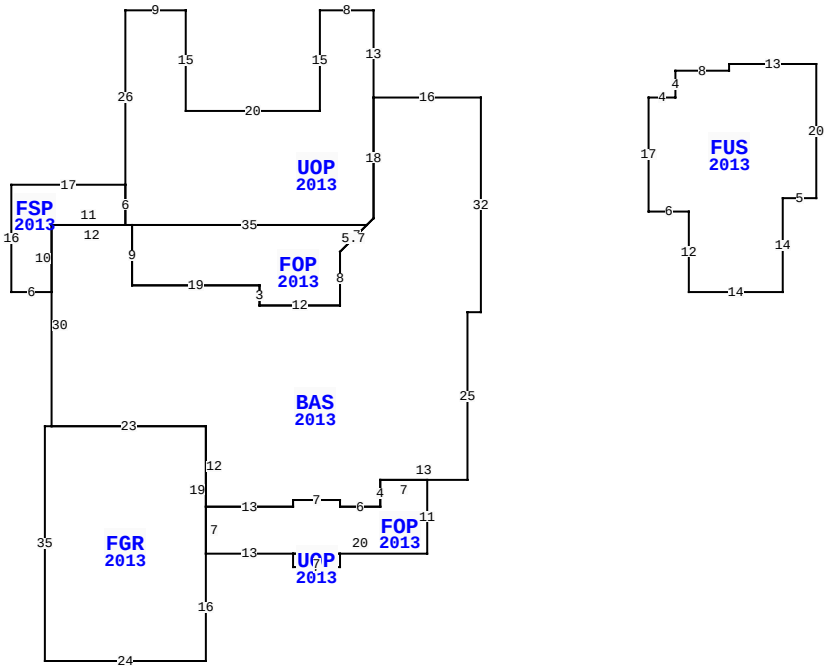

124 SEA MARSH RD, FERNANDINA BEACH

BLD DATE		LGL DATE	
XF DATE		LAND DATE	
INC DATE		AG DATE	

NASSAU COUNTY PROPERTY

PAGE 1 of 1 5

VALUATION SUMMARY

VALUATION BY		STANDARD
Tax Group: 5	Tax Dist:	
BUILDING MARKET VALUE		566,083
TOTAL MARKET OB/XF VALUE		13,755
TOTAL LAND VALUE - MARKET		450,000
TOTAL MARKET VALUE		1,029,838
SOH/AGL Deduction		423,499
ASSESSED VALUE		606,339
TOTAL EXEMPTION VALUE	HX HB	50,000
BASE TAXABLE VALUE		556,339
TOTAL JUST VALUE		1,029,838
NCON VALUE		0
INCOME VALUE		
PREVIOUS YEAR MKT VALUE		876,165

PERMIT NUM	DESCRIPTION	AMT	ISSUED
B1226253	CO ISSUED	0	05/20/2013
E1225648	NEW CONSTR	0	12/01/2012
B1226579	POOL	25,485	11/01/2012
M1217696	H/AC	0	10/01/2012
B26253	NEW CONSTR	352,168	08/02/2012
P1216049	NEW CONSTR	0	08/01/2012

SALES DATA

OFF RECORD Number	DATE	TYPE INST	Q U	V I	RSN CD	SALE PRICE
1567/1211	5/21/2008	WD	Q	V		357,000
GRANTOR: BEVERLY MANLEY LLC						
GRANTEE: MELVIN WILLIAM G &						
1385/0858	1/30/2006	WD	Q	V		260,000
GRANTOR: KELLY JOHN W & MARJOR						
GRANTEE: BEVERLY MANLEY LLC						

BUILDING NOTES

BUILDING DIMENSIONS

BAS=[YR=2013] W16 UOP=[YR=2013] N13 W8 S15 W20 N15 W9 S26 FSP=[YR=2013] W17 S16 E6 N10 E11 N6$ S6 E1 FOP=[YR=2013] S9 E19 S3 E12 N8 U4 R4 W35$ E35 U1 R1 N18$ S18 D5 L5 S8 W12 N3 W19 N9 W12 S30 FGR=[YR=2013] W1 S35 E24 N16 FOP=[YR=2013] E13 UOP=[YR=2013] S2 E7 N2 W7$ E20 N11 W7 S4 W6 N1 W7 S1 W13 S7$ N19 W23$ E23 S12 E13 N1 E7 S1 E6 N4 E13 N25 E2 N32$ PTR=E25 FUS=[YR=2013] E4 N4 E8 N1 E13 S20 W5 S14 W14 N12 W6 N17$ W25$.

EXTRA FEATURES

LN	OB/XF CODE	DESCRIPTION	BLD	CAP	L	W	UNITS	UT	Adj R	ADJ UNIT PRICE	ORIG COND	YEAR ON	YEAR ACTUAL	Q	% COND	OB/XF MKT VALUE	NOTES
1	0504	FP-ELECTRI	0	100	0	0	1.00	UT	2,000.00	2,000.00	100	2013	2013	3	96	1,920	
2	0855	CONC PAVER	0	100	0	0	1,396.00	SF	7.00	7.00	100	2013	2013	3	95	9,283	
3	0855	CONC PAVER	0	100	0	0	244.00	SF	7.00	7.00	100	2013	2013	3	95	1,623	
4	0855	CONC PAVER	0	100	0	0	76.00	SF	7.00	7.00	100	2013	2013	3	95	505	
5	0443	STK FNC 6'	0	100	0	0	25.00	LF	10.00	10.00	100	2013	2013	3	65	163	
6	0463	FENCE GATE	0	100	0	0	1.00	UT	300.00	300.00	100	2013	2013	3	87	261	

LAND DESCRIPTION

TOTAL OB/XF 13,755

LN	USE CODE	CLS	LAND USE DESCRIPTION	CAP	RD	LOC ZONE	FRONT	DEPTH	TOT LND UTS	UNIT TYPE	DT	DPTH FACT	% COND	TOT ADJ	UNIT PRICE	ADJ UNIT PRICE	LAND VALUE	OTHER ADJUSTMENTS AND NOTES	YEAR	DENSITY	DECL	FRZ	YR	CONSRV
1	000100	C	SFR	100		RS-1	0.00	0.00	1.00	LT		1.00	1.00	1.00	450,000.00	450,000.00	450,000							

REVIEW DATE 03/09/2018 BY DJX Total Acres: 0.00 Total Land Value: 450,000 Market: 0 Agricultural: 0 Common: 450,000 PRINTED 08/02/2023 BY SYS