LOT 39
SEA MARSH VILLAGE #2 PBK 4/16

BOGUE DOUGLAS & CATHERINE MCCLANE
858 BIG HORN HOLLOW
SUWANNEE, GA 30024

2023

01-6N-29-0300-0039-0000

NASSAU COUNTY PROPERTY

BUILDING CHARACTERISTICS

ELEMENT	CD	CONSTRUCTION
Exterior Wall	10	ABOVE AVG 100
Roof Structur	08	IRREGULAR 100
Roof Cover	03	COMP SHNGL 100
Interior Wall	05	DRYWALL 100
Interior Floo	14	CARPET 80
Interior Floo	12	HARDWOOD 20
Air Condition	03	CENTRAL 100
Heating Type	04	AIR DUCTED 100
Bedrooms		3 100
Bathrooms		3 100
Frame	02	WOOD FRAME 100
Stories	1.	1. 100
Units		0 100
Occupancy	00	NONE 100
Quality	05	Quality Level 05
DOR CODE	0100	SINGLE FAMILY
MAP NUM		MKT AREA 10
NEIGHBORHOOD/LOC	10001.00	

AREA TYPE	TOTAL GROSS AREA	PCT OF BASE	TOT ADJ AREA	SUBAREA MARKET VALUE
BAS	2,740	100	2,740	397,555
FGR	586	55	322	46,720
FOP	112	30	34	4,933
FSP	270	40	108	15,670
FUS	426	100	426	61,810
PTO	208	5	10	1,451
UOP	60	20	12	1,741
TOTALS	4,402		3,652	529,880

MARKET ADJUSTMENTS

TYPE	MDL	EFF. AREA	TOT ADJ PTS	EFF. BASE RATE	REPL. COST NEW	AYB	EYB	ECON	FNCT		NORM	% COND
0500	01	3,652	108.9000	155.18	566,717	1998	2008	0	0	0	6.50	93.50

1 SFR CUST – 0% - 0 Heated Area: 3166 HX Base Yr

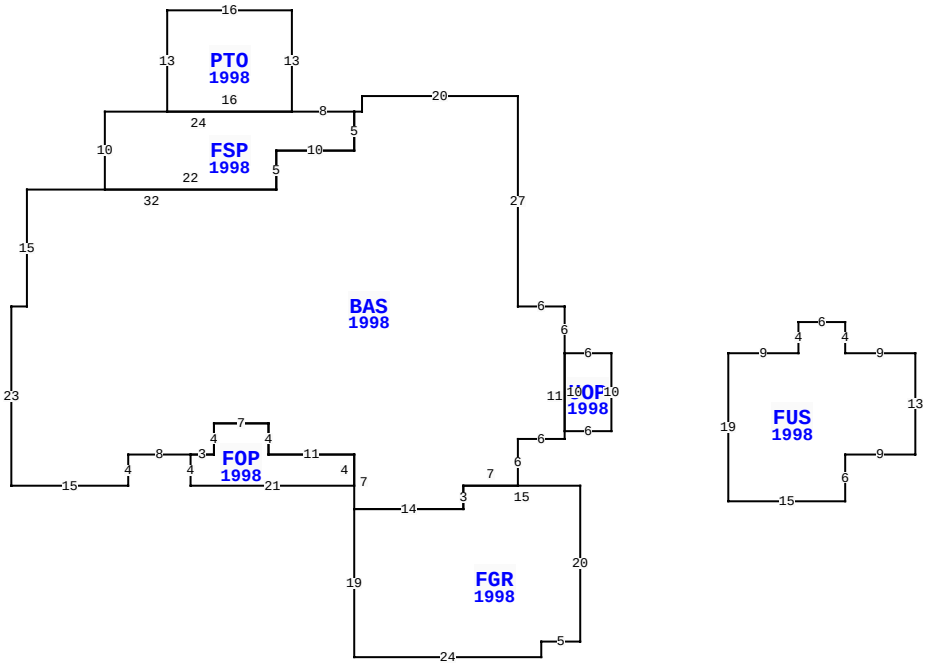

115 SEA MARSH RD, FERNANDINA BEACH

BLD DATE		LGL DATE	
XF DATE		LAND DATE	
INC DATE		AG DATE	

VALUATION SUMMARY

VALUATION BY	STANDARD
Tax Group: 5	Tax Dist:
BUILDING MARKET VALUE	529,880
TOTAL MARKET OB/XF VALUE	14,045
TOTAL LAND VALUE - MARKET	450,000
TOTAL MARKET VALUE	993,925
SOH/AGL Deduction	210,234
ASSESSED VALUE	783,691
TOTAL EXEMPTION VALUE	0
BASE TAXABLE VALUE	783,691
TOTAL JUST VALUE	993,925
NCON VALUE	0
INCOME VALUE	
PREVIOUS YEAR MKT VALUE	851,863

PERMIT NUM	DESCRIPTION	AMT	ISSUED
B1633300	REMODEL	40,000	10/01/2016
B9704074	NEW CONSTR	110,026	07/01/1997

SALES DATA

OFF RECORD Number	DATE	TYPE INST	Q U	V I	RSN CD	SALE PRICE
2271/0769	4/29/2019	WD	Q	I	02	760,000
GRANTOR: NUSSMAN MARC M & MAUR						
GRANTEE: BOGUE DOUGLAS & CAT						
2067/1097	8/24/2016	WD	Q	I	01	570,000
GRANTOR: CUNNINGHAM THERESA A						
GRANTEE: NUSSMAN MARC M & MA						

BUILDING NOTES

BUILDING DIMENSIONS

UOP=[YR=1998] W6 BAS=[YR=1998] N6 W6 N27 W20 S2 W1
FSP=[YR=1998] W8 PTO=[YR=1998] N13 W16 S13 E16 $ W24 S10
E22 N5 E10 N5 $ S5 W10 S5 W32 S15 W2 S23 E15 N4 E8
FOP=[YR=1998] S4 E21 N4 W11 N4 W7 S4 W3 $ E3 N4 E7 S4 E11 S7
FGR=[YR=1998] S19 E24 N2 E5 N20 W15 S3 W14 $ E14 N3 E7 N6 E6
N11 $ S10 E6 N10 $ PTR= E15 FUS=[YR=1998] E9 N4 E6 S4 E9 S13
W9 S6 W15 N19 $ W15 $.

EXTRA FEATURES

LN	OB/XF CODE	DESCRIPTION	BLD	CAP	L	W	UNITS	UT	Adj R	ADJ UNIT PRICE	ORIG COND	YEAR ON	YEAR ACTUAL	Q	% COND	OB/XF MKT VALUE	NOTES
1	0504	FP-ELECTRI	0	0	0	0	1.00	UT	2,000.00	2,000.00	100	1998	1998	3	83	1,660	
2	0855	CONC PAVER	0	0	0	0	1,824.00	SF	7.00	7.00	100	2016	2016	3	97	12,385	

LAND DESCRIPTION

TOTAL OB/XF 14,045

LN	USE CODE	CLS	LAND USE DESCRIPTION	CAP	RD	LOC ZONE	FRONT	DEPTH	TOT LND UTS	UNIT TYPE	DT	DPTH FACT	% COND	TOT ADJ	UNIT PRICE	ADJ UNIT PRICE	LAND VALUE	OTHER ADJUSTMENTS AND NOTES	YEAR	DENSITY	DECL	FRZ	YR	CONSRV
1	000100	C	SFR	0		RS-1	0.00	0.00	1.00	LT		1.00	1.00	1.00	450,000.00	450,000.00	450,000							

REVIEW DATE 02/15/2017 BY DJ Total Acres: 0.00 Total Land Value: 450,000 Market: 0 Agricultural: 0 Common: 450,000 PRINTED 08/02/2023 BY SYS