LOT 30
IN OR 1827/1899
SEA MARSH VILLAGE #2 PBK 4/16

MCCARTER WILLIAM S & LYNN M FAMILY TRUST/MCCARTER
133 SEA MARSH RD
FERNANDINA BEACH, FL 32034

**2023**

**01-6N-29-0300-0030-0000**

## BUILDING CHARACTERISTICS

| ELEMENT | CD | CONSTRUCTION |
|---|---|---|
| Exterior Wall | 12 | CEDAR 100 |
| Roof Structur | 03 | GABLE/HIP 100 |
| Roof Cover | 03 | COMP SHNGL 100 |
| Interior Wall | 05 | DRYWALL 100 |
| Interior Floo | 14 | CARPET 70 |
| Interior Floo | 11 | CLAY TILE 30 |
| Air Condition | 03 | CENTRAL 100 |
| Heating Type | 04 | AIR DUCTED 100 |
| Bedrooms | | 3 100 |
| Bathrooms | | 2.5 100 |
| Frame | 02 | WOOD FRAME 100 |
| Stories | 1. | 1. 100 |
| Units | | 0 100 |
| BUD8 Adjustme | 05 | DIST 1A 100 |
| Occupancy | 00 | NONE 100 |
| Quality | 04 | Quality Level 04 |
| DOR CODE | 0100 | SINGLE FAMILY |
| MAP NUM | | MKT AREA 10 |
| NEIGHBORHOOD/LOC | 10001.00 | |

| AREA TYPE | TOTAL GROSS AREA | PCT OF BASE | TOT ADJ AREA | SUBAREA MARKET VALUE |
|---|---|---|---|---|
| BAS | 2,602 | 100 | 2,602 | 342,693 |
| BAS | 48 | 100 | 48 | 6,322 |
| FGR | 591 | 55 | 325 | 42,804 |
| FOP | 21 | 30 | 6 | 790 |
| FOP | 96 | 30 | 29 | 3,819 |
| FOP | 114 | 30 | 34 | 4,478 |
| UOP | 100 | 20 | 20 | 2,634 |
| TOTALS | 3,572 | | 3,064 | 403,540 |

## MARKET ADJUSTMENTS

| TYPE | MDL | EFF. AREA | TOT ADJ PTS | EFF. BASE RATE | REPL. COST NEW | AYB | EYB | ECON | FNCT | | NORM | % COND |
|---|---|---|---|---|---|---|---|---|---|---|---|---|
| 0500 | 01 | 3,064 | 110.0274 | 156.79 | 480,405 | 1983 | 1990 | 0 | 0 | 0 | 16.00 | 84.00 |

1 SFR CUST – 100% - 2013 Heated Area: 2650 HX Base Yr 2013

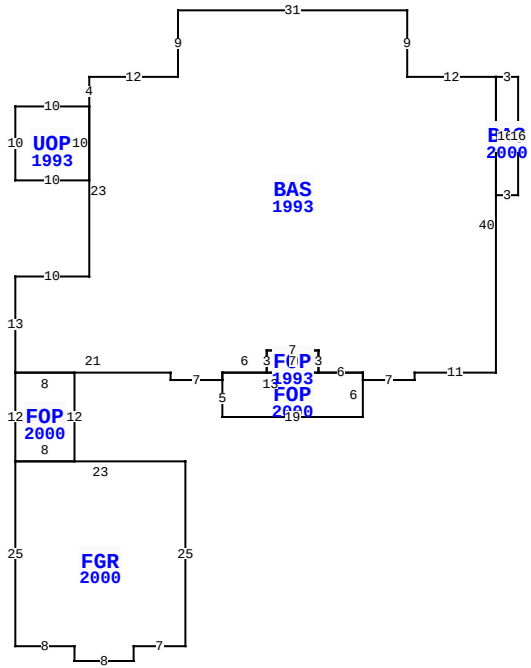


133 SEA MARSH RD, FERNANDINA BEACH

| | | | |
|---|---|---|---|
| BLD DATE | | LGL DATE | |
| XF DATE | | LAND DATE | |
| INC DATE | | AG DATE | |

## NASSAU COUNTY PROPERTY

PAGE 1 of 1 5

### VALUATION SUMMARY

| | | |
|---|---|---|
| VALUATION BY | | STANDARD |
| Tax Group: 5 | Tax Dist: | |
| BUILDING MARKET VALUE | | 403,540 |
| TOTAL MARKET OB/XF VALUE | | 16,984 |
| TOTAL LAND VALUE - MARKET | | 450,000 |
| TOTAL MARKET VALUE | | 870,524 |
| SOH/AGL Deduction | | 398,303 |
| ASSESSED VALUE | | 472,221 |
| TOTAL EXEMPTION VALUE | HX HB | 50,000 |
| BASE TAXABLE VALUE | | 422,221 |
| TOTAL JUST VALUE | | 870,524 |
| NCON VALUE | | 0 |
| INCOME VALUE | | |
| PREVIOUS YEAR MKT VALUE | | 758,827 |

| PERMIT NUM | DESCRIPTION | AMT | ISSUED |
|---|---|---|---|
| B007056 | GARAGE | 13,125 | 04/01/2000 |
| B007057 | REMODEL | 25,000 | 04/01/2000 |
| 7852 | REMODEL | 3,610 | 02/17/1992 |

## SALES DATA

| OFF RECORD Number | DATE | TYPE INST | Q / U | V / I | RSN CD | SALE PRICE |
|---|---|---|---|---|---|---|
| 1827/1899 | 12/03/2012 | WD | Q | I | 02 | 538,500 |
| GRANTOR: SCOTT ROBERT N & DARL | | | | | | |
| GRANTEE: MCCARTER WILLIAM S | | | | | | |
| 0916/1789 | 1/26/2000 | WD | U | I | | 259,000 |
| GRANTOR: SCHROEDER W E & MARGA | | | | | | |
| GRANTEE: SCOTT ROBERT N & DA | | | | | | |

## BUILDING NOTES

## BUILDING DIMENSIONS

BAS=[YR=2000] W3 BAS=[YR=1993] W12 N9 W31 S9 W12 S4 UOP=[YR=1993] W10 S10 E10 N10 $ S23 W10 S13 FOP=[YR=2000] S12 FGR=[YR=2000] S25 E8 S2 E8 N2 E7 N25 W23 $ E8 N12 W8 $ E21 S1 E7 FOP=[YR=2000] S5 E19 N6 W6 FOP=[YR=1993] N3 W7 S3 E7 $ W13 S1 $ N1 E6 N3 E7 S3 E6 S1 E7 N1 E11 N40 $ S16 E3 N16 $ .

## EXTRA FEATURES

| LN | OB/XF CODE | DESCRIPTION | BLD | CAP | L | W | UNITS | UT | Adj R | ADJ UNIT PRICE | ORIG COND | YEAR ON | YEAR ACTUAL | Q | % COND | OB/XF MKT VALUE | NOTES |
|---|---|---|---|---|---|---|---|---|---|---|---|---|---|---|---|---|---|
| 1 | 0504 | FP-ELECTRI | 0 | 100 | 0 | 0 | 1.00 | UT | 2,000.00 | 2,000.00 | 100 | 1983 | 1983 | 3 | 56 | 1,120 | |
| 2 | 0812 | CONCRETE C | 0 | 100 | 0 | 0 | 1,911.00 | SF | 4.00 | 4.00 | 100 | 2000 | 2000 | 3 | 80 | 6,115 | |
| 4 | 0825 | BRICK | 0 | 100 | 0 | 0 | 216.00 | SF | 12.50 | 12.50 | 100 | 1983 | 1983 | 3 | 80 | 2,160 | |
| 5 | 0858 | SCULP CONC | 0 | 100 | 0 | 0 | 621.00 | SF | 13.00 | 13.00 | 100 | 2000 | 2000 | 3 | 94 | 7,589 | |

## LAND DESCRIPTION

TOTAL OB/XF 16,984

| LN | USE CODE | CLS | LAND USE DESCRIPTION | CAP | RD | LOC ZONE | FRONT | DEPTH | TOT LND UTS | UNIT TYPE | DT | DPTH FACT | % COND | TOT ADJ | UNIT PRICE | ADJ UNIT PRICE | LAND VALUE | OTHER ADJUSTMENTS AND NOTES | YEAR | DENSITY | DECL | FRZ | YR | CONSRV |
|---|---|---|---|---|---|---|---|---|---|---|---|---|---|---|---|---|---|---|---|---|---|---|---|---|
| 1 | 000100 | C | SFR | 100 | | RS-1 | 0.00 | 0.00 | 1.00 | LT | | 1.00 | 1.00 | 1.00 | 450,000.00 | 450,000.00 | 450,000 | | | | | | | |

REVIEW DATE 03/09/2018 BY DJX Total Acres: 0.00 Total Land Value: 450,000 Market: 0 Agricultural: 0 Common: 450,000 PRINTED 08/02/2023 BY SYS