LOT 18
IN OR 672/599
SEA MARSH VILLAGE #2 PBK 4/16

LANE KEITH H & CINDI F
12 HICKORY LANE
FERNANDINA BEACH, FL 32034

2023

01-6N-29-0300-0018-0000

BUILDING CHARACTERISTICS

ELEMENT	CD	CONSTRUCTION
Exterior Wall	14	WD SHINGLE 100
Roof Structur	08	IRREGULAR 100
Roof Cover	03	COMP SHNGL 100
Interior Wall	05	DRYWALL 100
Interior Floo	14	CARPET 70
Interior Floo	12	HARDWOOD 30
Air Condition	03	CENTRAL 100
Heating Type	04	AIR DUCTED 100
Bedrooms		3 100
Bathrooms		2.5 100
Frame	02	WOOD FRAME 100
Stories	1.	1. 100
Units		0 100
Occupancy	00	NONE 100
Quality	04	Quality Level 04
DOR CODE	0100	SINGLE FAMILY
MAP NUM		MKT AREA 10
NEIGHBORHOOD/LOC	10001.00	

AREA TYPE	TOTAL GROSS AREA	PCT OF BASE	TOT ADJ AREA	SUBAREA MARKET VALUE
BAS	2,734	100	2,734	361,249
DCK	384	10	38	5,021
FGR	824	55	453	59,856
FOP	85	30	26	3,436
FOP	243	30	73	9,646
USP	1,100	30	330	43,604
TOTALS	5,370		3,654	482,810

MARKET ADJUSTMENTS

TYPE	MDL	EFF. AREA	TOT ADJ PTS	EFF. BASE RATE	REPL. COST NEW	AYB	EYB	ECON	FNCT		NORM	% COND
0500	01	3,654	105.3675	150.15	548,648	1996	1998	0	0	0	12.00	88.00

1 SFR CUST – 100% - 1997 Heated Area: 2734 HX Base Yr 1997

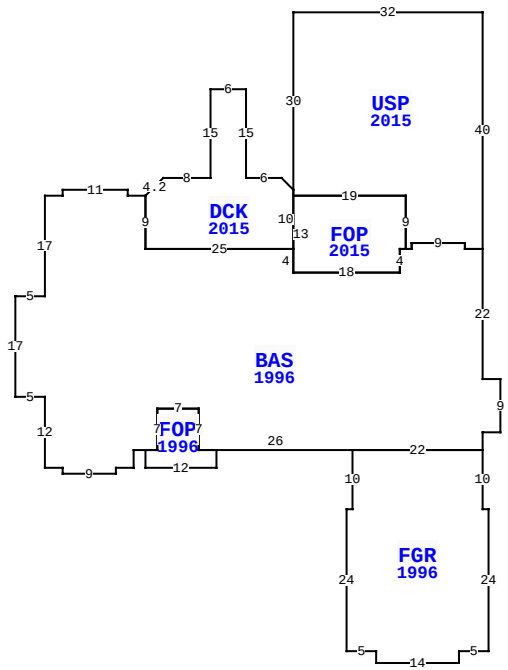

12 HICKORY LN, FERNANDINA BEACH

BLD DATE		LGL DATE	
XF DATE		LAND DATE	
INC DATE		AG DATE	

NASSAU COUNTY PROPERTY

PAGE 1 of 1 5

VALUATION SUMMARY

VALUATION BY		STANDARD
Tax Group: 5	Tax Dist:	
BUILDING MARKET VALUE		482,810
TOTAL MARKET OB/XF VALUE		49,803
TOTAL LAND VALUE - MARKET		450,000
TOTAL MARKET VALUE		982,613
SOH/AGL Deduction		495,831
ASSESSED VALUE		486,782
TOTAL EXEMPTION VALUE	HX HB	50,000
BASE TAXABLE VALUE		436,782
TOTAL JUST VALUE		982,613
NCON VALUE		0
INCOME VALUE		
PREVIOUS YEAR MKT VALUE		842,953

PERMIT NUM	DESCRIPTION	AMT	ISSUED
B1530411	SCRNRMMO	24,921	05/01/2015
B1529843	SWIM POOL	40,000	01/01/2015
B9502352	NEW CONSTR	189,000	11/01/1995

SALES DATA

OFF RECORD Number	DATE	TYPE INST	Q / U	V / I	RSN CD	SALE PRICE
0672/0599	12/18/1992	WD	U	V	06	29,000
GRANTOR: LANE GREGORY & F						
GRANTEE: LANE KEITH & CINDI						
0620/0656	3/01/1991	WD	U	V	01	26,800
GRANTOR: LANE GREGORY & F I						
GRANTEE: LANE KEITH & CINDI						

BUILDING NOTES

BUILDING DIMENSIONS

USP=[YR=2015] W32 S30 DCK=[YR=2015] U2 L2 W6 N15 W6 S15 W8 D3 L3 BAS=[YR=1996] W3 N1 W11 S1 W3 S17 W5 S17 E5 S12 E3 S1 E9 N1 E3 N3 E2 FOP=[YR=1996] S3 E12 N3 W3 N7 W7 S7 W2$ E2 N7 E7 S7 E26 FGR=[YR=1996] S10 W1 S24 E5 S2 E14 N2 E5 N24W1 N10 W22$ E22 N3 E3 N9 W3 N22 W3 N1 W9 S1 W1 FOP=[YR=2015] N9 W19 S13 E18 N4 E1$ W1 S4 W18 N4 W25 N9$ S9 E25 N10$ S1 E19 S9 E1 N1 E9 S1 E3 N40$.

EXTRA FEATURES

LN	OB/XF CODE	DESCRIPTION	BLD	CAP	L	W	UNITS	UT	Adj R	ADJ UNIT PRICE	ORIG COND	YEAR ON	YEAR ACTUAL	Q	% COND	OB/XF MKT VALUE	NOTES
1	0504	FP-ELECTRI	0	100	0	0	1.00	UT	2,000.00	2,000.00	100	1996	1996	3	80	1,600	
2	0812	CONCRETE C	0	100	0	0	1,967.00	SF	4.00	4.00	100	1996	1996	3	73	5,744	
3	1126	CB/STC 8"	0	100	0	0	156.00	SF	8.00	8.00	100	1996	1996	3	73	911	
4	0858	SCULP CONC	0	100	0	0	368.00	SF	13.00	13.00	100	1996	1996	3	92	4,401	
5	0445	BOX FNC 5'	0	100	0	0	11.00	LF	8.10	8.10	100	1996	1996	3	20	18	
6	0810	CONCRETE A	0	100	0	0	154.00	SF	6.50	6.50	100	1996	1996	3	73	731	
7	0861	POOL GUNIT	0	100	0	0	330.00	SF	85.00	85.00	100	2015	2015	3	81	22,721	
8	0871	POOL HTR R	0	100	0	0	1.00	UT	2,000.00	2,000.00	100	2015	2015	3	74	1,480	
9	0857	SANDSTONE	0	100	0	0	770.00	SF	16.00	16.00	100	2015	2015	3	99	12,197	

LAND DESCRIPTION

TOTAL OB/XF 49,803

LN	USE CODE	CLS	LAND USE DESCRIPTION	CAP	RD	LOC ZONE	FRONT	DEPTH	TOT LND UTS	UNIT TYPE	DT	DPTH FACT	% COND	TOT ADJ	UNIT PRICE	ADJ UNIT PRICE	LAND VALUE	OTHER ADJUSTMENTS AND NOTES	YEAR	DENSITY	DECL	FRZ	YR	CONSRV
1	000100	C	SFR	100		RS-1	0.00	0.00	1.00	LT		1.00	1.00	1.00	450,000.00	450,000.00	450,000							

REVIEW DATE 04/12/2018 BY DJX Total Acres: 0.00 Total Land Value: 450,000 Market: 0 Agricultural: 0 Common: 450,000 PRINTED 08/02/2023 BY SYS