LOT 15
IN OR 2231/1408
SEA MARSH VILLAGE #2 PBK 4/16

BARTMESS NANCY &/BURROUGHS RICHARD III
6 HICKORY LANE
FERNANDINA BEACH, FL 32034

2023

01-6N-29-0300-0015-0000

NASSAU COUNTY PROPERTY

BUILDING CHARACTERISTICS

ELEMENT	CD	CONSTRUCTION
Exterior Wall	10	ABOVE AVG 100
Roof Structur	03	GABLE/HIP 100
Roof Cover	03	COMP SHNGL 100
Interior Wall	05	DRYWALL 100
Interior Floo	11	CLAY TILE 70
Interior Floo	14	CARPET 30
Air Condition	03	CENTRAL 100
Heating Type	04	AIR DUCTED 100
Bedrooms		4 100
Bathrooms		4 100
Frame	02	WOOD FRAME 100
Stories	2.	2. 100
Units		0 100
Quality	05	Quality Level 05

DOR CODE 0100 SINGLE FAMILY
MAP NUM | MKT AREA 10
NEIGHBORHOOD/LOC 10001.00

AREA TYPE	TOTAL GROSS AREA	PCT OF BASE	TOT ADJ AREA	SUBAREA MARKET VALUE
BAS	2,911	100	2,911	619,115
FGR	725	55	399	84,860
FOP	200	30	60	12,761
FOP	683	30	205	43,600
FST	99	55	54	11,485
FUS	1,652	100	1,652	351,349
STR	108	10	11	2,339
USP	594	30	178	37,858
TOTALS	6,972		5,470	1,163,366

MARKET ADJUSTMENTS

TYPE	MDL	EFF. AREA	TOT ADJ PTS	EFF. BASE RATE	REPL. COST NEW	AYB	EYB	ECON	FNCT		NORM	% COND
0500	11	5,470	150.0012	213.75	1,169,212	2020	2020	0	0	0	0.50	99.50

1 SFR CUST – 100% - 2021 Heated Area: 4563 HX Base Yr 2021

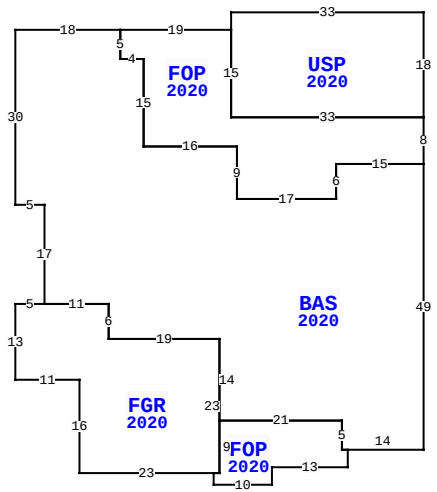

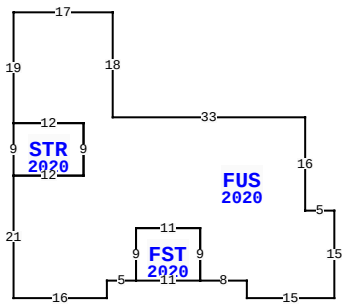

6 HICKORY LN, FERNANDINA BEACH

BLD DATE		LGL DATE	
XF DATE		LAND DATE	
INC DATE		AG DATE	

VALUATION SUMMARY

VALUATION BY		STANDARD
Tax Group: 5	Tax Dist:	
BUILDING MARKET VALUE		1,163,366
TOTAL MARKET OB/XF VALUE		67,367
TOTAL LAND VALUE - MARKET		450,000
TOTAL MARKET VALUE		1,680,733
SOH/AGL Deduction		547,260
ASSESSED VALUE		1,133,473
TOTAL EXEMPTION VALUE	HX HB	50,000
BASE TAXABLE VALUE		1,083,473
TOTAL JUST VALUE		1,680,733
NCON VALUE		0
INCOME VALUE		
PREVIOUS YEAR MKT VALUE		1,341,173

PERMIT NUM	DESCRIPTION	AMT	ISSUED
19009300	CO ISSUED	0	11/01/2020
2003655	SCRNENCL	13,467	06/01/2020
198370	SWIM POOL	50,000	10/02/2019
19009300	NEW CONSTR	614,873	08/29/2019

SALES DATA

OFF RECORD Number	DATE	TYPE INST	Q / U	V / I	RSN CD	SALE PRICE
2231/1408	10/15/2018	WD	Q	V	01	270,000
GRANTOR: BEAN MASON J & MARILY						
GRANTEE: BARTMESS NANCY & RI						
1289/1869	1/24/2005	WD	Q	V		231,300
GRANTOR: HERTZFELD JAN & MIRTA						
GRANTEE: BEAN MASON J & MARI						

BUILDING NOTES

BUILDING DIMENSIONS

USP=[YR=2020] W33 S3 FOP=[YR=2020] W19 BAS=[YR=2020] W18 S30 E5 S17 FGR=[YR=2020] W5 S13 E11 S16 E23 FOP=[YR=2020] S2 E10 N3 E13 N3 W1 N5 W21 S9 W1 $ E1 N23 W19 N6 W11$E11 S6 E19 S14 E21 S5 E14 N49 W15 S6 W17 N9 W16 N15 W4 N5 $ S5 E4 S15 E16 S9 E17 N6 E15 N8 W33 N15 $ S15 E33 N18 $ PTR= E30 FUS=[YR=2020] E17 S18 E33 S16 E5 S15 W15 N3 W8 FST=[YR=2020] W 11 N9 E11 S9 $ N9 W11 S9 W5 S3 W16 N21 STR=[YR=2020] N9 E12 S9 W12 $ E12 N9 W12 N19 $ W30 $.

EXTRA FEATURES

LN	OB/XF CODE	DESCRIPTION	BLD	CAP	L	W	UNITS	UT	Adj R	ADJ UNIT PRICE	ORIG COND	YEAR ON	YEAR ACTUAL	Q	% COND	OB/XF MKT VALUE	NOTES
1	0500	FP-PRE FAB	0	100	0	0	1.00	UT	3,500.00	3,500.00	100	2020	2020	3	99	3,465	
2	0855	CONC PAVER	0	100	0	0	2,424.00	SF	10.00	10.00	100	2020	2020	3	99	23,998	
3	0861	POOL GUNIT	0	100	0	0	405.00	SF	85.00	85.00	100	2020	2020	3	95	32,704	
4	0462	ST/AL FNC	0	100	0	0	696.00	SF	10.00	10.00	100	2020	2020	3	95	6,612	
5	0463	FENCE GATE	0	100	0	0	2.00	UT	300.00	300.00	100	2020	2020	3	98	588	

LAND DESCRIPTION

TOTAL OB/XF 67,367

LN	USE CODE	CLS	LAND USE DESCRIPTION	CAP	RD	LOC ZONE	FRONT	DEPTH	TOT LND UTS	UNIT TYPE	DT	DPTH FACT	% COND	TOT ADJ	UNIT PRICE	ADJ UNIT PRICE	LAND VALUE	OTHER ADJUSTMENTS AND NOTES	YEAR	DENSITY	DECL	FRZ	YR	CONSRV
1	000100	C	SFR	100		RS-1	0.00	0.00	1.00	LT		1.00	1.00	1.00	450,000.00	450,000.00	450,000							

REVIEW DATE 10/20/2020 BY RK Total Acres: 0.00 Total Land Value: 450,000 Market: 0 Agricultural: 0 Common: 450,000 PRINTED 08/02/2023 BY SYS