LOT 10
IN OR 1129/1496
SEA MARSH VILLAGE 2 PBK 4/16

MULLEN THOMAS G JR & HELEN E
5 WATER OAK
FERNANDINA BEACH, FL 32034

2023

01-6N-29-0300-0010-0000

BUILDING CHARACTERISTICS

ELEMENT	CD	CONSTRUCTION
Exterior Wall	10	ABOVE AVG 70
Exterior Wall	12	CEDAR 30
Roof Structur	03	GABLE/HIP 100
Roof Cover	03	COMP SHNGL 100
Interior Wall	04	PLYWOOD 80
Interior Wall	05	DRYWALL 20
Interior Floo	12	HARDWOOD 50
Interior Floo	14	CARPET 50
Air Condition	03	CENTRAL 100
Heating Type	04	AIR DUCTED 100
Bedrooms		3 100
Bathrooms		2 100
Frame	02	WOOD FRAME 100
Stories	1.	1. 100
Units		0 100
BUD8 Adjustme	05	DIST 1A 100
Occupancy	00	NONE 100
Quality	04	Quality Level 04
DOR CODE	0100	SINGLE FAMILY
MAP NUM		MKT AREA 10
NEIGHBORHOOD/LOC	10001.00	

AREA TYPE	TOTAL GROSS AREA	PCT OF BASE	TOT ADJ AREA	SUBAREA MARKET VALUE
BAS	2,724	100	2,724	324,448
FGR	625	55	344	40,973
FOP	36	30	11	1,310
UOP	8	20	2	238
UOP	20	20	4	477
UST	78	45	35	4,169
TOTALS	3,491		3,120	371,615

MARKET ADJUSTMENTS

TYPE	MDL	EFF. AREA	TOT ADJ PTS	EFF. BASE RATE	REPL. COST NEW	AYB	EYB	ECON	FNCT		NORM	% COND
0500	01	3,120	104.7144	149.22	465,566	1975	1975	0	0	0	20.18	79.82

1 SFR CUST – 100% - 1985 Heated Area: 2724 HX Base Yr 1985

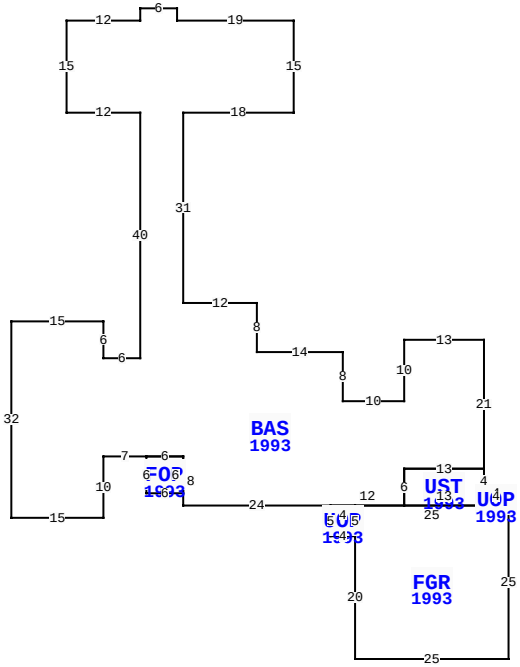

5 WATER OAK, FERNANDINA BEACH

BLD DATE		LGL DATE	
XF DATE		LAND DATE	
INC DATE		AG DATE	

NASSAU COUNTY PROPERTY

PAGE 1 of 1 5

VALUATION SUMMARY

VALUATION BY		STANDARD
Tax Group: 5	Tax Dist:	
BUILDING MARKET VALUE		371,615
TOTAL MARKET OB/XF VALUE		4,561
TOTAL LAND VALUE - MARKET		450,000
TOTAL MARKET VALUE		826,176
SOH/AGL Deduction		505,685
ASSESSED VALUE		320,491
TOTAL EXEMPTION VALUE	HX HB	50,000
BASE TAXABLE VALUE		270,491
TOTAL JUST VALUE		826,176
NCON VALUE		0
INCOME VALUE		
PREVIOUS YEAR MKT VALUE		728,242

PERMIT NUM	DESCRIPTION	AMT	ISSUED
B18547	REMODEL	2,500	10/31/2006
3560	H/AC	2,750	10/15/1990
6269	XFOB	10,166	02/06/1990
5831	REPAIR/RRF	900	06/26/1989

SALES DATA

OFF RECORD Number	DATE	TYPE INST	Q / U	V / I	RSN CD	SALE PRICE
1129/1496	4/14/2003	WD	U	I	01	100
GRANTOR: MULLEN THOMAS G JR &						
GRANTEE: MULLEN HELEN & THOM						
0441/0603	12/01/1984	WD	Q	I		140,000
GRANTOR:						
GRANTEE:						

BUILDING NOTES

BUILDING DIMENSIONS

BAS=[YR=1993] W13 S10 W10 N8 W14 N8 W12 N31 E18 N15 W19 N2 W6 S2 W12 S15 E12 S40 W6 N6 W15 S32 E15 N10 E7 FOP=[YR=1993] S6 E6 N6 W6 $ E6 S8 E24 UOP=[YR=1993] S5 E4 FGR=[YR=1993] S20 E25 N25 UOP=[YR=1993] N2 W4 UST=[YR=1993] N4 W13 S6 E13 N2 $ S2 E4 $ W25 S5 $ N5 W4 $ E12 N6 E13 N21 $.

EXTRA FEATURES

LN	OB/XF CODE	DESCRIPTION	BLD	CAP	L	W	UNITS	UT	Adj R	ADJ UNIT PRICE	ORIG COND	YEAR ON	YEAR ACTUAL	Q	% COND	OB/XF MKT VALUE	NOTES
1	0850	PEBBLE WLK	0	100	0	0	238.00	SF	3.50	3.50	100	1975	1975	3	27	225	
2	0810	CONCRETE A	0	100	0	0	81.00	SF	6.50	6.50	100	1975	1975	3	27	142	
3	1242	WD DECK A	0	100	0	0	909.00	SF	10.00	10.00	100	1990	1990	3	20	1,818	
4	0811	CONCRETE B	0	100	0	0	737.00	SF	5.20	5.20	100	1990	1990	3	62	2,376	

LAND DESCRIPTION

TOTAL OB/XF 4,561

LN	USE CODE	CLS	LAND USE DESCRIPTION	CAP	RD	LOC ZONE	FRONT	DEPTH	TOT LND UTS	UNIT TYPE	DT	DPTH FACT	% COND	TOT ADJ	UNIT PRICE	ADJ UNIT PRICE	LAND VALUE	OTHER ADJUSTMENTS AND NOTES	YEAR	DENSITY	DECL	FRZ	YR	CONSRV
1	000100	C	SFR	100		RS-1	0.00	0.00	1.00	LT		1.00	1.00	1.00	450,000.00	450,000.00	450,000							

REVIEW DATE 04/12/2018 BY DJX Total Acres: 0.00 Total Land Value: 450,000 Market: 0 Agricultural: 0 Common: 450,000 PRINTED 08/02/2023 BY SYS