LOT 136
BEACHWOOD VILLAGE UNIT 2
PB 4/35 & 36

NOAKES PERRY ALAN & SUZETTE
2 BUCKTHORNE DR
FERNANDINA BEACH, FL 32034

2023

01-6N-29-0202-0136-0000

NASSAU COUNTY PROPERTY

BUILDING CHARACTERISTICS

ELEMENT	CD	CONSTRUCTION
Exterior Wall	10	ABOVE AVG 90
Exterior Wall	16	WD FR STUC 10
Roof Structur	08	IRREGULAR 100
Roof Cover	03	COMP SHNGL 100
Interior Wall	05	DRYWALL 100
Interior Floo	12	HARDWOOD 50
Interior Floo	14	CARPET 50
Air Condition	03	CENTRAL 100
Heating Type	04	AIR DUCTED 100
Bedrooms		5 100
Bathrooms		4.5 100
Frame	02	WOOD FRAME 100
Stories	2.	2. 100
Units		0 100
BUD8 Adjustme	05	DIST 1A 100
Quality	06	Quality Level 06
DOR CODE	0100	SINGLE FAMILY
MAP NUM		MKT AREA 10
NEIGHBORHOOD/LOC	10001.00	

AREA TYPE	TOTAL GROSS AREA	PCT OF BASE	TOT ADJ AREA	SUBAREA MARKET VALUE
BAS	2,236	100	2,236	435,034
BAS	48	100	48	9,339
BAS	529	100	529	102,922
BAS	536	100	536	104,283
BAS	15	100	15	2,918
FGR	160	55	88	17,121
FGR	324	55	178	34,632
FOP	28	30	8	1,556
FSP	350	40	140	27,238
FST	84	55	46	8,949
TOTALS	4,835		4,315	839,523

MARKET ADJUSTMENTS

TYPE	MDL	EFF. AREA	TOT ADJ PTS	EFF. BASE RATE	REPL. COST NEW	AYB	EYB	ECON	FNCT		NORM	% COND
0500	11	4,315	140.8308	200.68	865,934	1985	2015	0	0	0	3.05	96.95

1 SFR CUST – 100% - 2021 Heated Area: 3847 HX Base Yr 2021

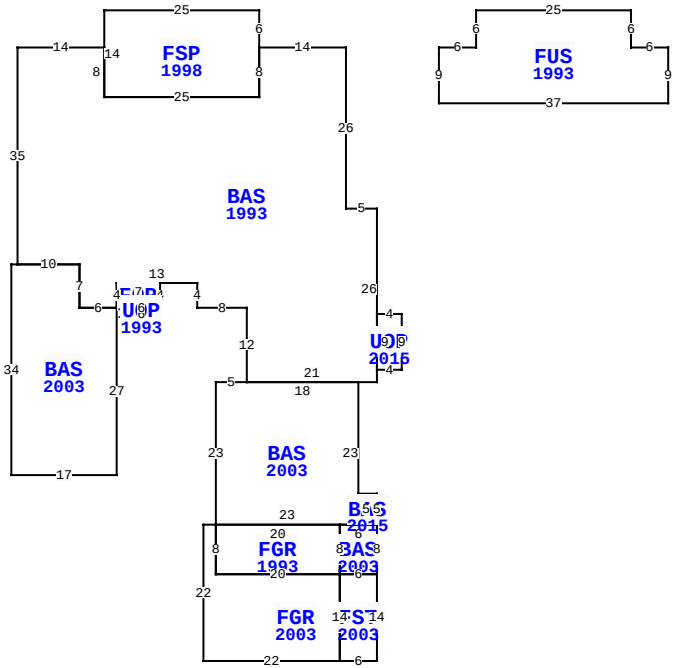

** This building has 13 Sub-Areas

2 BUCKTHORNE DR, FERNANDINA BEACH

BLD DATE		LGL DATE	
XF DATE		LAND DATE	
INC DATE		AG DATE	

VALUATION SUMMARY

VALUATION BY		STANDARD
Tax Group: 5	Tax Dist:	
BUILDING MARKET VALUE		839,523
TOTAL MARKET OB/XF VALUE		10,262
TOTAL LAND VALUE - MARKET		495,000
TOTAL MARKET VALUE		1,344,785
SOH/AGL Deduction		416,815
ASSESSED VALUE		927,970
TOTAL EXEMPTION VALUE	HX HB	50,000
BASE TAXABLE VALUE		877,970
TOTAL JUST VALUE		1,344,785
NCON VALUE		0
INCOME VALUE		
PREVIOUS YEAR MKT VALUE		1,026,665

PERMIT NUM	DESCRIPTION	AMT	ISSUED
B1529777	ADDITION	115,000	01/01/2015
E1528601	REMODEL	0	01/01/2015
E0312049	REMODEL	1,000	11/01/2003
E0311794	REMODEL	2,000	10/01/2003
B9804737	REMODEL	17,150	03/01/1998

SALES DATA

OFF RECORD Number	DATE	TYPE INST	Q / U	V / I	RSN CD	SALE PRICE
2347/1121	3/16/2020	WD	Q	I	02	1,230,000
GRANTOR: OSBORNE CHRISTIE M						
GRANTEE: NOAKES PERRY ALAN &						
1947/0079	11/12/2014	WD	Q	I	02	525,000
GRANTOR: DAVIS JOHNIE M ET AL						
GRANTEE: OSBORNE CHRISTIE M						

BUILDING NOTES

BUILDING DIMENSIONS

BAS=[YR=1993] W14 FSP=[YR=1998] N6 W25 S14 E25 N8 $ S8 W25 N8 W14 S35 BAS=[YR=2003] W1 S34 E17 N27 W6 N7 W10 $ E10 S7 E6 FOP=[YR=1993] E1 UOP=[YR=1993] S1 E6 N1 W6 $ E6 N4 W7 S4 $ N4 E13 S4 E8 S12 BAS=[YR=2003] W5 S23 FGR=[YR=2003] W2 S22 E22 FST=[YR=2003] E6 N14 W6 S14 $ N14 W20 N8 $ FGR=[YR=1993] S8 E20 BAS=[YR=2003] E6 N8 W6 S8 $ N8 W20 $ E23 BAS=[YR=2015] E3 N5 W3 S5 $ N23 W18 $ E21 N2 UOP=[YR=2015] E4 N9 W4 S9$ N26 W5 N26 $ PTR=E15 FUS=[YR=1993] E6 N6 E25 S6 E6 S9W37 N9$ W15$.

EXTRA FEATURES

LN	OB/XF CODE	DESCRIPTION	BLD	CAP	L	W	UNITS	UT	Adj R	ADJ UNIT PRICE	ORIG COND	YEAR ON	YEAR ACTUAL	Q	% COND	OB/XF MKT VALUE	NOTES
1	0812	CONCRETE C	0	100	0	0	1,476.00	SF	4.00	4.00	100	2003	2003	3	84	4,959	
2	0504	FP-ELECTRI	0	100	0	0	1.00	UT	2,000.00	2,000.00	100	1985	1985	3	60	1,200	
5	1242	WD DECK A	0	100	0	0	414.00	SF	10.00	10.00	100	1985	1985	3	20	828	
6	0810	CONCRETE A	0	100	0	0	157.00	SF	6.50	6.50	100	2003	2003	3	84	857	
7	0445	BOX FNC 5'	0	100	0	0	18.00	LF	8.10	8.10	100	2003	2003	3	22	32	
8	1126	CB/STC 8"	0	100	0	0	355.00	SF	8.00	8.00	100	2003	2003	3	84	2,386	

LAND DESCRIPTION

TOTAL OB/XF 10,262

LN	USE CODE	CLS	LAND USE DESCRIPTION	CAP	RD	LOC ZONE	FRONT	DEPTH	TOT LND UTS	UNIT TYPE	DT	DPTH FACT	% COND	TOT ADJ	UNIT PRICE	ADJ UNIT PRICE	LAND VALUE	OTHER ADJUSTMENTS AND NOTES	YEAR	DENSITY	DECL	FRZ	YR	CONSRV
1	000100	C	SFR	100		RS-1	0.00	0.00	1.00	LT		1.00	1.00	1.10	450,000.00	495,000.00	495,000							

REVIEW DATE 04/21/2020 BY DJA Total Acres: 0.00 Total Land Value: 495,000 Market: 0 Agricultural: 0 Common: 495,000 PRINTED 08/02/2023 BY SYS