LOT 126
BEACHWOOD VILLAGE UNIT 2
PB 4/35 & 36

SAPORITO JOSEPH J & JACQUELINE
13 KNOTTY PINE PLACE
TEXARKANA, TX 75503

2023

01-6N-29-0202-0126-0000

NASSAU COUNTY PROPERTY

BUILDING CHARACTERISTICS

ELEMENT	CD	CONSTRUCTION
Exterior Wall	16	WD FR STUC 100
Roof Structur	08	IRREGULAR 100
Roof Cover	03	COMP SHNGL 100
Interior Wall	05	DRYWALL 100
Interior Floo	14	CARPET 70
Interior Floo	11	CLAY TILE 30
Air Condition	03	CENTRAL 100
Heating Type	04	AIR DUCTED 100
Bedrooms		3 100
Bathrooms		3.5 100
Frame	02	WOOD FRAME 100
Stories	1.5	1.5 100
Units		0 100
BUD8 Adjustme	05	DIST 1A 100
Occupancy	00	NONE 100
Quality	05	Quality Level 05
DOR CODE	0100	SINGLE FAMILY
MAP NUM		MKT AREA 10
NEIGHBORHOOD/LOC	10001.00	

AREA TYPE	TOTAL GROSS AREA	PCT OF BASE	TOT ADJ AREA	SUBAREA MARKET VALUE
BAS	1,720	100	1,720	284,411
BAS	120	100	120	19,842
FGR	368	55	202	33,402
FOP	80	30	24	3,969
FUS	552	100	552	91,276
UOP	264	20	53	8,764
UOP	248	20	50	8,268
TOTALS	3,352		2,721	449,932

MARKET ADJUSTMENTS

TYPE	MDL	EFF. AREA	TOT ADJ PTS	EFF. BASE RATE	REPL. COST NEW	AYB	EYB	ECON	FNCT		NORM	% COND
0500	01	2,721	123.4464	175.91	478,651	1985	2010	0	0	0	6.00	94.00

1 SFR CUST – 0% - 0 Heated Area: 2392 HX Base Yr

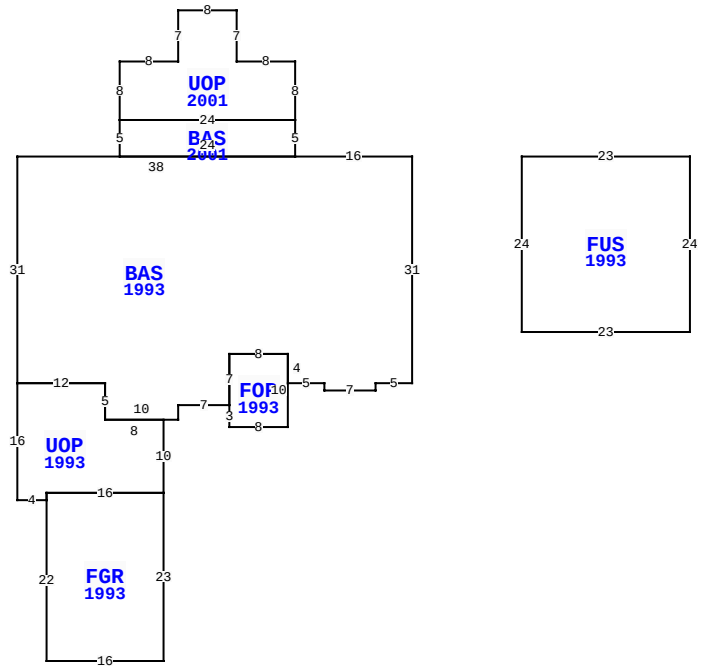

6 WILD GRAPE, FERNANDINA BEACH

BLD DATE		LGL DATE	
XF DATE		LAND DATE	
INC DATE		AG DATE	

VALUATION SUMMARY

VALUATION BY	STANDARD
Tax Group: 5	Tax Dist:
BUILDING MARKET VALUE	449,932
TOTAL MARKET OB/XF VALUE	8,552
TOTAL LAND VALUE - MARKET	350,000
TOTAL MARKET VALUE	808,484
SOH/AGL Deduction	44,262
ASSESSED VALUE	764,222
TOTAL EXEMPTION VALUE	0
BASE TAXABLE VALUE	764,222
TOTAL JUST VALUE	808,484
NCON VALUE	0
INCOME VALUE	
PREVIOUS YEAR MKT VALUE	778,794

PERMIT NUM	DESCRIPTION	AMT	ISSUED
B0108128	ADDITION	45,000	04/01/2001

SALES DATA

OFF RECORD Number	DATE	TYPE INST	Q / U	V / I	RSN CD	SALE PRICE
2391/0482	9/10/2020	WD	Q	I	01	869,000
GRANTOR: BRINK REALTY LLC						
GRANTEE: SAPORITO JOSEPH J &						
2236/1395	11/14/2018	WD	Q	I	01	475,000
GRANTOR: MONROE ROLAND S III &						
GRANTEE: BRINK REALTY LLC						

BUILDING NOTES

BUILDING DIMENSIONS

BAS=[YR=1993] W16 BAS=[YR=2001] N5 UOP=[YR=2001] N8 W8 N7 W8 S7 W8 S8 E24$ W24 S5 E24 $ W38 S31 UOP=[YR=1993] S16 E4 FGR=[YR=1993] S22 E16 N23 W16 S1 $ N1 E16 N10 W8 N5 W12 $ E12 S5 E10 N2 E7 FOP=[YR=1993] S3E8 N10 W8 S7 $ N7 E8 S4 E5 S1 E7 N1 E5 N31 $ PTR=E15 FUS=[YR=1993] E23 S24 W23 N24$ W15$.

EXTRA FEATURES

LN	OB/XF CODE	DESCRIPTION	BLD	CAP	L	W	UNITS	UT	Adj R	ADJ UNIT PRICE	ORIG COND	YEAR ON	YEAR ACTUAL	Q	% COND	OB/XF MKT VALUE	NOTES
1	0855	CONC PAVER	0	0	0	0	618.00	SF	7.00	7.00	100	2013	2013	3	95	4,110	
2	0504	FP-ELECTRI	0	0	0	0	1.00	UT	2,000.00	2,000.00	100	1985	1985	3	60	1,200	
3	0855	CONC PAVER	0	0	0	0	221.00	SF	7.00	7.00	100	2013	2013	3	95	1,470	
4	1125	CB/STC 6"	0	0	0	0	189.00	SF	7.35	7.35	100	1985	1985	3	49.5	688	
5	1242	WD DECK A	0	0	0	0	368.00	SF	10.00	10.00	100	1985	1985	3	20	736	
6	1126	CB/STC 8"	0	0	8	11	88.00	SF	8.00	8.00	100	1985	1985	3	49.5	348	

LAND DESCRIPTION

TOTAL OB/XF 8,552

LN	USE CODE	CLS	LAND USE DESCRIPTION	CAP	RD	LOC ZONE	FRONT	DEPTH	TOT LND UTS	UNIT TYPE	DT	DPTH FACT	% COND	TOT ADJ	UNIT PRICE	ADJ UNIT PRICE	LAND VALUE	OTHER ADJUSTMENTS AND NOTES	YEAR	DENSITY	DECL	FRZ	YR	CONSRV
1	000100	C	SFR	0		RS-1	0.00	0.00	1.00	LT		1.00	1.00	1.00	350,000.00	350,000.00	350,000							

REVIEW DATE 04/24/2017 BY DJX Total Acres: 0.00 Total Land Value: 350,000 Market: 0 Agricultural: 0 Common: 350,000 PRINTED 08/02/2023 BY SYS