LOT 97
IN OR 1900/1020
BEACHWOOD VILLAGE UNIT 1

CASHDAN JOY J
52 LAUREL OAK
FERNANDINA BEACH, FL 32034

2023

01-6N-29-0201-0097-0000

BUILDING CHARACTERISTICS

ELEMENT	CD	CONSTRUCTION
Exterior Wall	12	CEDAR 100
Roof Structur	08	IRREGULAR 100
Roof Cover	10	WD SHINGLE 100
Interior Wall	05	DRYWALL 100
Interior Floo	14	CARPET 50
Interior Floo	15	HARDTILE 50
Air Condition	03	CENTRAL 100
Heating Type	04	AIR DUCTED 100
Bedrooms		3 100
Bathrooms		3 100
Frame	02	WOOD FRAME 100
Stories	2.	2. 100
Units		0 100
BUD8 Adjustme	05	DIST 1A 100
Quality	06	Quality Level 06
DOR CODE	0100	SINGLE FAMILY
MAP NUM		MKT AREA 10
NEIGHBORHOOD/LOC	10001.00	

AREA TYPE	TOTAL GROSS AREA	PCT OF BASE	TOT ADJ AREA	SUBAREA MARKET VALUE
BAS	1,454	100	1,454	280,353
FGR	396	55	218	42,034
FOP	32	30	10	1,928
FSP	168	40	67	12,918
FUS	932	100	932	179,703
UOP	40	20	8	1,542
UOP	714	20	143	27,573
UST	80	45	36	6,941
TOTALS	3,816		2,868	552,993

MARKET ADJUSTMENTS

TYPE	MDL	EFF. AREA	TOT ADJ PTS	EFF. BASE RATE	REPL. COST NEW	AYB	EYB	ECON	FNCT		NORM	% COND
0500	11	2,868	165.0123	235.14	674,382	1986	1986	0	0	0	18.00	82.00

1 SFR CUST - 100% - 2015 Heated Area: 2386 HX Base Yr 2015

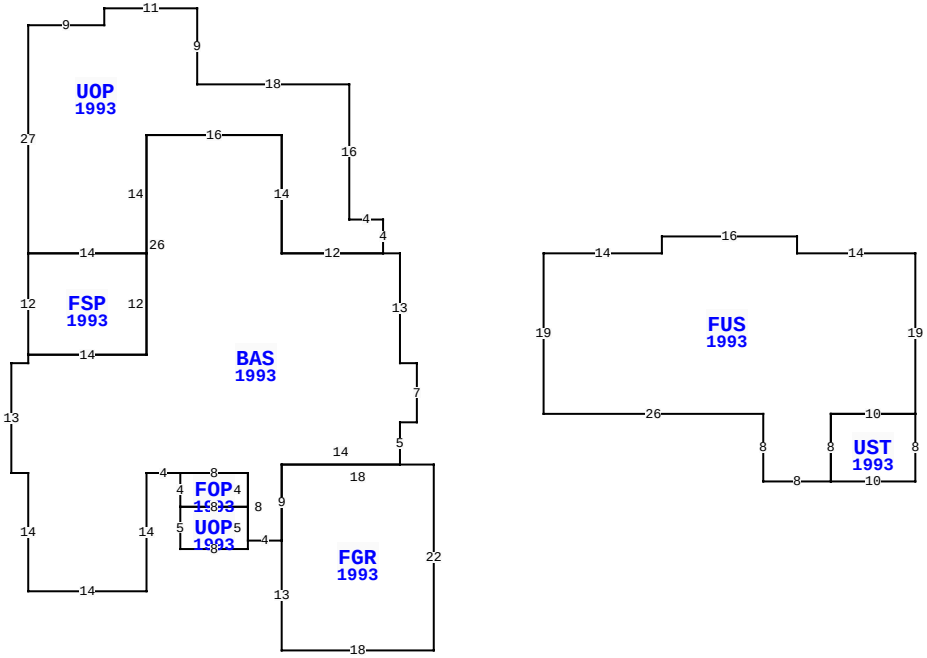

52 LAUREL OAK, FERNANDINA BEACH

BLD DATE		LGL DATE	
XF DATE		LAND DATE	
INC DATE		AG DATE	

NASSAU COUNTY PROPERTY

PAGE 1 of 1 5

VALUATION SUMMARY

VALUATION BY		STANDARD
Tax Group: 5	Tax Dist:	
BUILDING MARKET VALUE		552,993
TOTAL MARKET OB/XF VALUE		9,995
TOTAL LAND VALUE - MARKET		350,000
TOTAL MARKET VALUE		912,988
SOH/AGL Deduction		365,383
ASSESSED VALUE		547,605
TOTAL EXEMPTION VALUE	HX HB	50,000
BASE TAXABLE VALUE		497,605
TOTAL JUST VALUE		912,988
NCON VALUE		0
INCOME VALUE		
PREVIOUS YEAR MKT VALUE		747,283

PERMIT NUM	DESCRIPTION	AMT	ISSUED

SALES DATA

OFF RECORD Number	DATE	TYPE INST	Q / U	V / I	RSN CD	SALE PRICE
1900/1020	1/31/2014	WD	Q	I	02	575,000
GRANTOR: WAGES THOMAS A & BARB						
GRANTEE: CASHDAN JOY J						
1303/1588	3/23/2005	WD	Q	I		500,000
GRANTOR: FOGARTY THOMAS P & DE						
GRANTEE: WAGES THOMAS A & BA						

BUILDING NOTES

BUILDING DIMENSIONS

BAS=[YR=1993] W2 UOP=[YR=1993] N4 W4 N16 W18 N9 W11 S2 W9 S27 FSP=[YR=1993] S12 E14 N12W14 $ E14 N14 E16 S14 E12 $ W12 N14 W16 S26 W14 S1 W2 S13 E2 S14 E14 N14 E4 FOP=[YR=1993] S4 UOP=[YR=1993] S5 E8 N5 W8 $ E8 N4 W8 $ E8 S8E4 FGR=[YR=1993] S13 E18 N22 W18 S9 $ N9 E14 N5 E2 N7 W2 N13 $ PTR= E17 FUS=[YR=1993] E14 N2 E16 S2 E14 S19 UST=[YR=1993] S8 W10 N8 E10 $ W10 S8 W8 N8 W26 N19 $ W17 $.

EXTRA FEATURES

LN	OB/XF CODE	DESCRIPTION	BLD	CAP	L	W	UNITS	UT	Adj R	ADJ UNIT PRICE	ORIG COND	YEAR ON	YEAR ACTUAL	Q	% COND	OB/XF MKT VALUE	NOTES
1	0504	FP-ELECTRI	0	100	0	0	1.00	UT	2,000.00	2,000.00	100	1986	1986	3	62	1,240	
2	0850	PEBBLE WLK	0	100	0	0	775.00	SF	3.50	3.50	100	1986	1986	3	52	1,411	
3	1126	CB/STC 8"	0	100	70	6	70.00	SF	8.00	8.00	100	1986	1986	3	52	291	
4	1100	VAC SYSTEM	0	100	0	0	1.00	UT	800.00	800.00	100	1986	1986	3	20	160	
5	0825	BRICK	0	100	0	0	557.00	SF	12.50	12.50	100	2014	2014	3	99	6,893	

LAND DESCRIPTION

TOTAL OB/XF 9,995

LN	USE CODE	CLS	LAND USE DESCRIPTION	CAP	RD	LOC ZONE	FRONT	DEPTH	TOT LND UTS	UNIT TYPE	DT	DPTH FACT	% COND	TOT ADJ	UNIT PRICE	ADJ UNIT PRICE	LAND VALUE	OTHER ADJUSTMENTS AND NOTES	YEAR	DENSITY	DECL	FRZ	YR	CONSRV
1	000100	C	SFR	100		RS-1	0.00	0.00	1.00	LT		1.00	1.00	1.00	350,000.00	350,000.00	350,000							

REVIEW DATE 11/06/2019 BY DJA Total Acres: 0.00 Total Land Value: 350,000 Market: 0 Agricultural: 0 Common: 350,000 PRINTED 08/02/2023 BY SYS