LOT 82
BEACHWOOD VILLAGE UNIT 1
PB 4/25-27

DELPRETE HELEN C & GEORGE R II
11399 BANTRY TERRACE
FAIRFAX, VA 22030

2023

01-6N-29-0201-0082-0000

NASSAU COUNTY PROPERTY

BUILDING CHARACTERISTICS

ELEMENT	CD	CONSTRUCTION
Exterior Wall	17	CB STUCCO 100
Roof Structur	06	MANSARD 100
Roof Cover	06	ASB SHINGL 100
Interior Wall	05	DRYWALL 100
Interior Floo	12	HARDWOOD 70
Interior Floo	11	CLAY TILE 30
Air Condition	03	CENTRAL 100
Heating Type	04	AIR DUCTED 100
Bedrooms		3 100
Bathrooms		3 100
Frame	02	WOOD FRAME 100
Stories	2.	2. 100
Units		0 100
BUD8 Adjustme	05	DIST 1A 100
Occupancy	00	NONE 100
Quality	04	Quality Level 04
DOR CODE	0100	SINGLE FAMILY
MAP NUM		MKT AREA 10
NEIGHBORHOOD/LOC	10001.00	

AREA TYPE	TOTAL GROSS AREA	PCT OF BASE	TOT ADJ AREA	SUBAREA MARKET VALUE
BAS	1,088	100	1,088	139,483
BAS	1,266	100	1,266	162,302
BAS	132	100	132	16,923
BAS	318	100	318	40,767
FGR	330	55	182	23,333
FST	104	55	57	7,308
UOP	96	20	19	2,436
UOP	960	20	192	24,614
TOTALS	4,294		3,254	417,165

MARKET ADJUSTMENTS

TYPE	MDL	EFF. AREA	TOT ADJ PTS	EFF. BASE RATE	REPL. COST NEW	AYB	EYB	ECON	FNCT		NORM	% COND
0500	01	3,254	115.3404	164.36	534,827	1978	1978	0	0	0	22.00	78.00

1 SFR CUST – 100% - 2003 Heated Area: 2804 HX Base Yr 2003

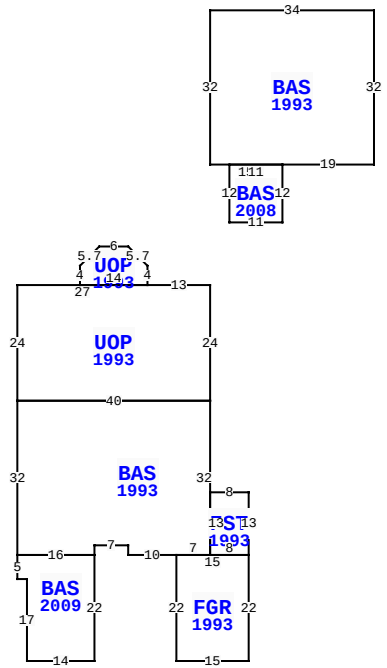

39 LAUREL OAK, FERNANDINA BEACH

BLD DATE		LGL DATE	
XF DATE		LAND DATE	
INC DATE		AG DATE	

VALUATION SUMMARY

VALUATION BY		STANDARD
Tax Group: 5	Tax Dist:	
BUILDING MARKET VALUE		417,165
TOTAL MARKET OB/XF VALUE		9,971
TOTAL LAND VALUE - MARKET		420,000
TOTAL MARKET VALUE		847,136
SOH/AGL Deduction		413,720
ASSESSED VALUE		433,416
TOTAL EXEMPTION VALUE	HX HB	50,000
BASE TAXABLE VALUE		383,416
TOTAL JUST VALUE		847,136
NCON VALUE		0
INCOME VALUE		
PREVIOUS YEAR MKT VALUE		711,786

PERMIT NUM	DESCRIPTION	AMT	ISSUED
M14153	MECH OTHER	1,500	09/01/2008
R11508	REPAIR/RRF	6,000	08/01/2008
B21485	ADDITION	142,000	05/01/2008

SALES DATA

OFF RECORD Number	DATE	TYPE INST	Q / U	V / I	RSN CD	SALE PRICE
2632/234	4/17/2023	WD	Q	I	01	1,157,500
GRANTOR: KIMMEL J STEPHEN & CA						
GRANTEE: DELPRETE HELEN C &						
1801/1938	6/07/2012	TD	U	I	11	100
GRANTOR: KIMMEL J STEPHEN & CA						
GRANTEE: KIMMEL J STEPHEN &						

BUILDING NOTES

BUILDING DIMENSIONS

UOP=[YR=1993] W13 UOP=[YR=1993] N4 U4 L4 W6 L4 D4 S4 E14$ W27 S24 BAS=[YR=1993] S32 BAS=[YR=2009] S5 E2 S17 E14 N22 W16$ E16 N2 E7 S2 E10 FGR=[YR=1993] S22 E15 N22 FST=[YR=1993] N13 W8 S13 E8$ W15$ E7 N32 W40 $ E40 N24$ PTR=N25 BAS=[YR=1993] N32 E34 S32 W19 BAS=[YR=2008] S12 W11 N12 E11$ W15$ S25$.

EXTRA FEATURES

LN	OB/XF CODE	DESCRIPTION	BLD	CAP	L	W	UNITS	UT	Adj R	ADJ UNIT PRICE	ORIG COND	YEAR ON	YEAR ACTUAL	Q	% COND	OB/XF MKT VALUE	NOTES
1	0504	FP-ELECTRI	0	100	0	0	1.00	UT	2,000.00	2,000.00	100	1980	1980	3	49	980	
2	1271	H-SHUTR LC	0	100	0	0	14.00	UT	45.00	45.00	100	2008	2008	3	40	252	
3	0855	CONC PAVER	0	100	0	0	971.00	SF	10.00	10.00	100	2008	2008	3	90	8,739	

LAND DESCRIPTION

TOTAL OB/XF 9,971

LN	USE CODE	CLS	LAND USE DESCRIPTION	CAP	RD	LOC ZONE	FRONT	DEPTH	TOT LND UTS	UNIT TYPE	DT	DPTH FACT	% COND	TOT ADJ	UNIT PRICE	ADJ UNIT PRICE	LAND VALUE	OTHER ADJUSTMENTS AND NOTES	YEAR	DENSITY	DECL	FRZ	YR	CONSRV
1	000100	C	SFR	100		RS-1	0.00	0.00	1.00	LT		1.00	1.00	1.20	350,000.00	420,000.00	420,000							

REVIEW DATE 04/12/2018 BY DJX Total Acres: 0.00 Total Land Value: 420,000 Market: 0 Agricultural: 0 Common: 420,000 PRINTED 08/02/2023 BY SYS