LOTS 68 & 67
BEACHWOOD VLGE # 1 PB 4/25-27

ANDERSON AMY C
19 LAUREL OAK
FERNANDINA BEACH, FL 32034

2023

01-6N-29-0201-0068-0000

BUILDING CHARACTERISTICS

ELEMENT	CD	CONSTRUCTION
Exterior Wall	12	CEDAR 50
Exterior Wall	16	WD FR STUC 50
Roof Structur	03	GABLE/HIP 100
Roof Cover	03	COMP SHNGL 100
Interior Wall	05	DRYWALL 100
Interior Floo	12	HARDWOOD 80
Interior Floo	11	CLAY TILE 20
Air Condition	03	CENTRAL 100
Heating Type	04	AIR DUCTED 100
Bedrooms		3 100
Bathrooms		3 100
Frame	02	WOOD FRAME 100
Stories	2.	2. 100
Units		0 100
BUD8 Adjustme	05	DIST 1A 100
Occupancy	00	NONE 100
Quality	04	Quality Level 04
DOR CODE	0100	SINGLE FAMILY
MAP NUM		MKT AREA 10
NEIGHBORHOOD/LOC	10001.00	

AREA TYPE	TOTAL GROSS AREA	PCT OF BASE	TOT ADJ AREA	SUBAREA MARKET VALUE
BAS	3,512	100	3,512	427,391
FGR	526	55	289	35,169
FOP	21	30	6	730
FOP	33	30	10	1,217
FSP	256	40	102	12,412
FUS	336	100	336	40,890
UOP	36	20	7	852
UOP	76	20	15	1,826
UOP	252	20	50	6,085
UOP	309	20	62	7,545
TOTALS	5,357		4,389	534,116

MARKET ADJUSTMENTS

TYPE	MDL	EFF. AREA	TOT ADJ PTS	EFF. BASE RATE	REPL. COST NEW	AYB	EYB	ECON	FNCT		NORM	% COND
0500	01	4,389	105.4284	150.24	659,403	1984	1984	0	0	0	19.00	81.00

1 SFR CUST - 100% - 2019 Heated Area: 3848 HX Base Yr 2019

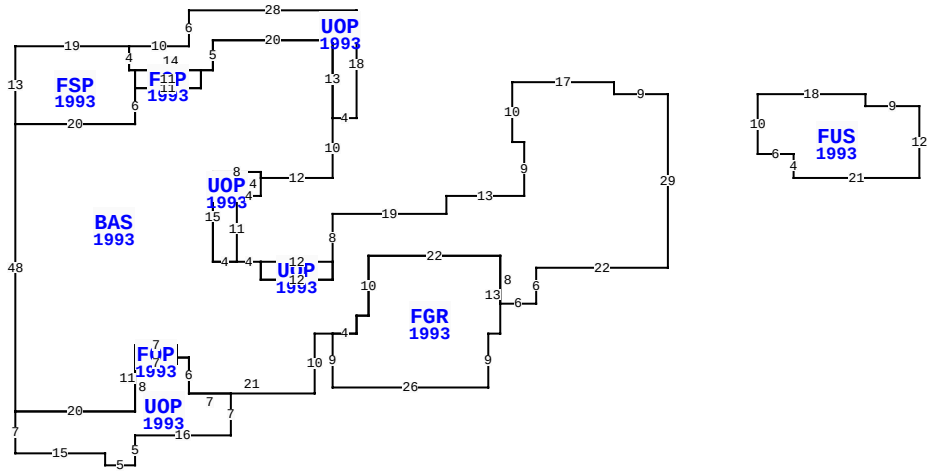

19 LAUREL OAK, FERNANDINA BEACH

BLD DATE		LGL DATE	
XF DATE		LAND DATE	
INC DATE		AG DATE	

NASSAU COUNTY PROPERTY

PAGE 1 of 1 5

VALUATION SUMMARY

VALUATION BY		STANDARD
Tax Group: 5	Tax Dist:	
BUILDING MARKET VALUE		534,116
TOTAL MARKET OB/XF VALUE		6,843
TOTAL LAND VALUE - MARKET		700,000
TOTAL MARKET VALUE		1,240,959
SOH/AGL Deduction		394,401
ASSESSED VALUE		846,558
TOTAL EXEMPTION VALUE	HX HB	50,000
BASE TAXABLE VALUE		796,558
TOTAL JUST VALUE		1,240,959
NCON VALUE		0
INCOME VALUE		
PREVIOUS YEAR MKT VALUE		1,144,541

PERMIT NUM	DESCRIPTION	AMT	ISSUED
R002584	REPAIR/RRF	0	06/01/2000
8273	ADDITION	99,900	07/30/1992

SALES DATA

OFF RECORD Number	DATE	TYPE INST	Q / U	V / I	RSN CD	SALE PRICE
2542/0685	2/18/2022	QC	U	I	11	100
GRANTOR: ANDERSON AMY L						
GRANTEE: ANDERSON AMY C						
2421/1556	3/03/2020	WD	U	I	11	100
GRANTOR: ANDERSON JANET H LIVI						
GRANTEE: ANDERSON AMY L						

BUILDING NOTES

BUILDING DIMENSIONS

BAS=[YR=1993] W9 N2 W17 S10 E2 S9 W13 S3 W19 S8 UOP=[YR=1993] W12 S3 E12 N3 $ S3 W12 N3 W4 UOP=[YR=1993] N11 E4 N4 W8 S15 E4 $ W4 N15 E8S1 E12 N10 UOP=[YR=1993] E4 N18 W28 S6 W10 FSP=[YR=1993] W19 S13 E20 N6 FOP=[YR=1993] E11 N3 W11 S3 $ N3 W1 N4 $ S4 E14 N5 E20 S13 $ N13 W20 S5 W2 S3 W11 S6 W20 S48 UOP=[YR=1993] S7E15S2 E5 N5 E16 N7W7 N6W2 FOP=[YR=1993] N2W7S3 E7N1 $ S1 W7S8W20 $E20N11E7S2E2S6 E21N10E3 FGR=[YR=1993] S9E26N9E2N13 W22S10W2S3 W4$E4N3E2N10E22S8E6 N6E22N29$ PTR=E15FUS=[YR=1993] E18S2 E9S12W21N4W6N10$W15$.

EXTRA FEATURES

LN	OB/XF CODE	DESCRIPTION	BLD	CAP	L	W	UNITS	UT	Adj R	ADJ UNIT PRICE	ORIG COND	YEAR ON	YEAR ACTUAL	Q	% COND	OB/XF MKT VALUE	NOTES
1	0811	CONCRETE B	0	100	40	20	800.00	SF	5.20	5.20	100	1992	1992	3	66	2,746	
2	0504	FP-ELECTRI	0	100	0	0	1.00	UT	2,000.00	2,000.00	100	1984	1984	3	58	1,160	
3	0820	WOOD WALK	0	100	45	3	135.00	SF	11.75	11.75	100	1984	1984	3	40	635	
4	1126	CB/STC 8"	0	100	0	0	308.00	SF	8.00	8.00	100	1984	1984	3	47	1,158	
5	0300	BOAT DCK W	0	100	6	8	48.00	SF	40.00	40.00	100	1984	1984	3	20	384	
6	1126	CB/STC 8"	0	100	18	8	144.00	SF	8.00	8.00	100	1992	1992	3	66	760	

LAND DESCRIPTION

TOTAL OB/XF 6,843

LN	USE CODE	CLS	LAND USE DESCRIPTION	CAP	RD	LOC ZONE	FRONT	DEPTH	TOT LND UTS	UNIT TYPE	DT	DPTH FACT	% COND	TOT ADJ	UNIT PRICE	ADJ UNIT PRICE	LAND VALUE	OTHER ADJUSTMENTS AND NOTES	YEAR	DENSITY	DECL	FRZ	YR	CONSRV
1	000100	C	SFR	100		RS-1	0.00	0.00	2.00	LT		1.00	1.00	1.00	350,000.00	350,000.00	700,000							

REVIEW DATE 01/10/2017 BY DJ Total Acres: 0.00 Total Land Value: 700,000 Market: 0 Agricultural: 0 Common: 700,000 PRINTED 08/02/2023 BY SYS