LOT 53
IN OR 2496/182
BEACHWOOD VILLAGE UNIT 1

BYRD TRUST/BYRD MARY LEE TRUSTEE
63 LAUREL OAK ROAD
FERNANDINA BEACH, FL 32034

2023

01-6N-29-0201-0053-0000

NASSAU COUNTY PROPERTY

BUILDING CHARACTERISTICS

ELEMENT	CD	CONSTRUCTION
Exterior Wall	10	ABOVE AVG 100
Roof Structur	08	IRREGULAR 100
Roof Cover	03	COMP SHNGL 100
Interior Wall	05	DRYWALL 100
Interior Floo	12	HARDWOOD 70
Interior Floo	11	CLAY TILE 30
Air Condition	03	CENTRAL 100
Heating Type	04	AIR DUCTED 100
Bedrooms		3 100
Bathrooms		3.5 100
Frame	02	WOOD FRAME 100
Stories	1.5	1.5 100
Units		0 100
Occupancy	00	NONE 100
Quality	03	Quality Level 03
DOR CODE	0100	SINGLE FAMILY
MAP NUM		MKT AREA 10
NEIGHBORHOOD/LOC	10001.00	

AREA TYPE	TOTAL GROSS AREA	PCT OF BASE	TOT ADJ AREA	SUBAREA MARKET VALUE
BAS	3,749	100	3,749	576,884
FGR	506	55	278	42,778
FOP	238	30	71	10,926
FST	475	55	261	40,161
FUS	760	100	760	116,946
UOP	36	20	7	1,078
UOP	52	20	10	1,539
UOP	84	20	17	2,616
UOP	140	20	28	4,308
UOP	708	20	142	21,850
TOTALS	6,748		5,323	819,086

MARKET ADJUSTMENTS

TYPE	MDL	EFF. AREA	TOT ADJ PTS	EFF. BASE RATE	REPL. COST NEW	AYB	EYB	ECON	FNCT		NORM	% COND
0500	01	5,323	109.6300	156.22	831,559	2018	2018	0	0	0	1.50	98.50

1 SFR CUST – 100% - 2019 Heated Area: 4509 HX Base Yr 2019

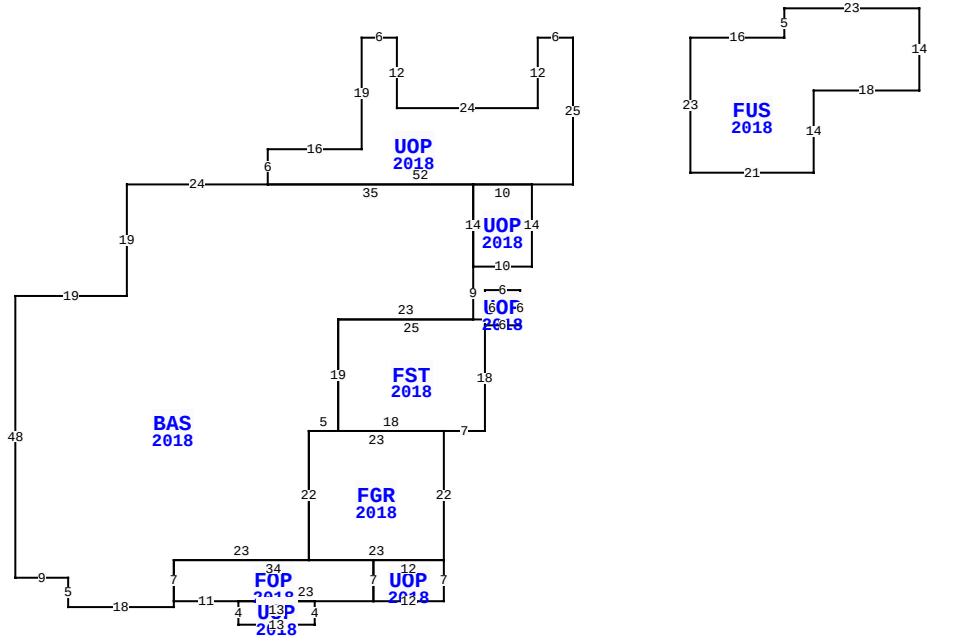

63 LAUREL OAK, FERNANDINA BEACH

BLD DATE		LGL DATE	
XF DATE		LAND DATE	
INC DATE		AG DATE	

VALUATION SUMMARY

VALUATION BY		STANDARD
Tax Group: 5	Tax Dist:	
BUILDING MARKET VALUE		819,086
TOTAL MARKET OB/XF VALUE		88,402
TOTAL LAND VALUE - MARKET		450,000
TOTAL MARKET VALUE		1,357,488
SOH/AGL Deduction		325,425
ASSESSED VALUE		1,032,063
TOTAL EXEMPTION VALUE	HX HB	50,000
BASE TAXABLE VALUE		982,063
TOTAL JUST VALUE		1,357,488
NCON VALUE		0
INCOME VALUE		
PREVIOUS YEAR MKT VALUE		1,171,259

PERMIT NUM	DESCRIPTION	AMT	ISSUED
B1803384	SCRN ENCL	21,510	04/03/2018
B1802751	CO ISSUED	0	03/16/2018
B1800043	SWIM POOL	49,452	01/02/2018
B1633647	NEW CONSTR	562,692	12/01/2016

SALES DATA

OFF RECORD Number	DATE	TYPE INST	Q / U	V / I	RSN CD	SALE PRICE
2496/0182	9/09/2021	SW	U	I	11	100
GRANTOR: BYRD EDWIN LEONARD &						
GRANTEE: BYRD TRUST						
2195/1600	5/02/2018	WD	U	V	11	100
GRANTOR: BYRD EDWIN L						
GRANTEE: BYRD EDWIN L & MARY						

BUILDING NOTES

BUILDING DIMENSIONS

UOP=[YR=2018] W6 S12 W24 N12 W6 S19 W16 S6 BAS=[YR=2018] W24 S19 W19 S48 E9 S5 E18 N1 FOP=[YR=2018] E11 UOP=[YR=2018] S4 E13 N4 W13$ E23 UOP=[YR=2018] E12 N7 FGR=[YR=2018] N22 FST=[YR=2018] E7 N18 UOP=[YR=2018] E6 N6 W6 S6$ N1 W25 S19 E18$ W23 S22 E23$ W12 S7$ N7 W34 S7$ N7 E23 N22 E5 N19 E23 N9 UOP=[YR=2018] E10 N14 W10 S14$ N14 W35$ E52 N25$ PTR=E20 FUS=[YR=2018] E16 N5 E23 S14 W18 S14 W21 N23$ W20$.

EXTRA FEATURES

LN	OB/XF CODE	DESCRIPTION	BLD	CAP	L	W	UNITS	UT	Adj R	ADJ UNIT PRICE	ORIG COND	YEAR ON	YEAR ACTUAL	Q	% COND	OB/XF MKT VALUE	NOTES
1	0504	FP-ELECTRI	0	100	0	0	1.00	UT	2,000.00	2,000.00	100	2018	2018	3	99	1,980	
2	0861	POOL GUNIT	0	100	0	0	288.00	SF	127.50	127.50	100	2018	2018	3	90	33,048	
3	0855	CONC PAVER	0	100	0	0	2,682.00	SF	10.00	10.00	100	2018	2018	3	98	26,284	
4	0911	SCRN RM A	0	100	0	0	900.00	SF	35.00	35.00	100	2018	2018	3	86	27,090	

LAND DESCRIPTION

TOTAL OB/XF 88,402

LN	USE CODE	CLS	LAND USE DESCRIPTION	CAP	RD	LOC ZONE	FRONT	DEPTH	TOT LND UTS	UNIT TYPE	DT	DPTH FACT	% COND	TOT ADJ	UNIT PRICE	ADJ UNIT PRICE	LAND VALUE	OTHER ADJUSTMENTS AND NOTES	YEAR	DENSITY	DECL	FRZ	YR	CONSRV
1	000100	C	SFR	100		RS-1	0.00	0.00	1.00	LT		1.00	1.00	1.00	450,000.00	450,000.00	450,000							

REVIEW DATE 04/13/2018 BY DJ Total Acres: 0.00 Total Land Value: 450,000 Market: 0 Agricultural: 0 Common: 450,000 PRINTED 08/02/2023 BY SYS