LOT 19
BEACHWOOD VILLAGE UNIT 1
PB 4/25-27

GERAK ANTHONY & PATRICIA
19 SPARKLEBERRY CT
FERNANDINA BEACH, FL 32034

2023

01-6N-29-0201-0019-0000

BUILDING CHARACTERISTICS

ELEMENT	CD	CONSTRUCTION
Exterior Wall	12	CEDAR 80
Exterior Wall	16	WD FR STUC 20
Roof Structur	08	IRREGULAR 100
Roof Cover	03	COMP SHNGL 100
Interior Wall	05	DRYWALL 100
Interior Floo	12	HARDWOOD 60
Interior Floo	11	CLAY TILE 40
Air Condition	03	CENTRAL 100
Heating Type	04	AIR DUCTED 100
Bedrooms		3 100
Bathrooms		4.5 100
Frame	02	WOOD FRAME 100
Stories	2.	2. 100
Units		0 100
BUD8 Adjustme	05	DIST 1A 100
Quality	04	Quality Level 04
DOR CODE	0100	SINGLE FAMILY
MAP NUM		MKT AREA 10
NEIGHBORHOOD/LOC	10001.00	

AREA TYPE	TOTAL GROSS AREA	PCT OF BASE	TOT ADJ AREA	SUBAREA MARKET VALUE
BAS	1,871	100	1,871	350,233
BAS	1,046	100	1,046	195,801
FGR	630	55	346	64,768
FOP	62	30	19	3,556
FOP	70	30	21	3,931
FUS	1,008	100	1,008	188,688
PTO	326	5	16	2,995
UOP	72	20	14	2,621
UOP	24	20	5	936
UOP	36	20	7	1,310
TOTALS	5,145		4,353	814,840

MARKET ADJUSTMENTS

TYPE	MDL	EFF. AREA	TOT ADJ PTS	EFF. BASE RATE	REPL. COST NEW	AYB	EYB	ECON	FNCT		NORM	% COND
0500	11	4,353	141.2506	201.28	876,172	1988	2008	0	0	0	7.00	93.00

1 SFR CUST – 100% - 2023 Heated Area: 3925 HX Base Yr 2023

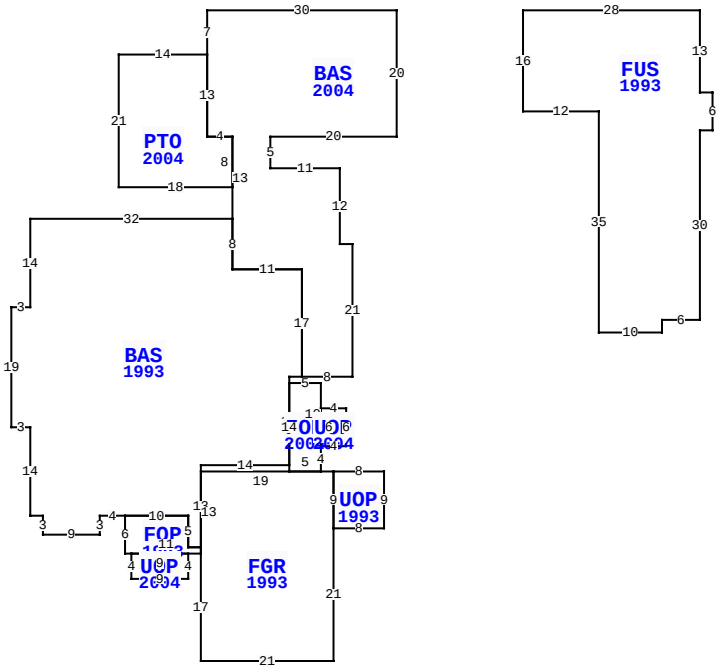

19 SPARKLEBERRY CT, FERNANDINA BEACH

BLD DATE		LGL DATE	
XF DATE		LAND DATE	
INC DATE		AG DATE	

NASSAU COUNTY PROPERTY

PAGE 1 of 1 5

VALUATION SUMMARY

VALUATION BY		STANDARD
Tax Group: 5	Tax Dist:	
BUILDING MARKET VALUE		814,840
TOTAL MARKET OB/XF VALUE		12,830
TOTAL LAND VALUE - MARKET		450,000
TOTAL MARKET VALUE		1,277,670
SOH/AGL Deduction		0
ASSESSED VALUE		1,277,670
TOTAL EXEMPTION VALUE	HX HB	50,000
BASE TAXABLE VALUE		1,227,670
TOTAL JUST VALUE		1,277,670
NCON VALUE		245,142
INCOME VALUE		
PREVIOUS YEAR MKT VALUE		793,415

PERMIT NUM	DESCRIPTION	AMT	ISSUED
R035241	REPAIR/RRF	5,000	07/01/2003
4780	NEW CONSTR	130,000	03/28/1988

SALES DATA

OFF RECORD Number	DATE	TYPE INST	Q U /	V I /	RSN CD	SALE PRICE
2575/0063	6/27/2022	WD	Q	I	02	1,560,000
GRANTOR: CANTOR DONALD C & C D						
GRANTEE: GERAK ANTHONY & PAT						
2160/1262	11/30/2017	WD	Q	I	01	736,300
GRANTOR: GREENBLUM JESSE & CAT						
GRANTEE: CANTOR DONALD C & C						

BUILDING NOTES

BUILDING DIMENSIONS

BAS=[YR=2004] W30 S7 PTO=[YR=2004] W14 S21 E18 N8 W4 N13 $ S13 E4 S13 BAS=[YR=1993] W32 S14 W3 S19 E3 S14 E2 S3 E9 N3 E4 FOP=[YR=1993] S6 E1 UOP=[YR=2004] S4 E9 N4 W9 $ E11 FGR=[YR=1993] S17 E21 N21 UOP=[YR=1993] E8 N9 W8 S9 $ N9 W2 FOP=[YR=2004] N4 UOP=[YR=2004] E4 N6 W4 S6 $ N10 W5 S14 E5 $ W19 S13 $ N1 W2 N5 W10 $ E10 S5 E2 N13 E14 N14 E2 N17 W11 N8 $ S8 E11 S17 E8 N21 W2 N12 W11 N5 E20 N20 $ PTR= E20 FUS=[YR=1993] E28 S13 E2 S6 W2 S30 W6 S2 W10 N35 W12 N16 $ W20 $.

EXTRA FEATURES

LN	OB/XF CODE	DESCRIPTION	BLD	CAP	L	W	UNITS	UT	Adj R	ADJ UNIT PRICE	ORIG COND	YEAR ON	YEAR ACTUAL	Q	% COND	OB/XF MKT VALUE	NOTES
2	0504	FP-ELECTRI	0	100	0	0	1.00	UT	2,000.00	2,000.00	100	1988	1988	3	66	1,320	
3	0812	CONCRETE C	0	100	0	0	2,513.00	SF	4.00	4.00	100	1988	1988	3	57	5,730	
5	0504	FP-ELECTRI	0	100	0	0	1.00	UT	2,000.00	2,000.00	100	2004	2004	3	89	1,780	
6	0855	CONC PAVER	1	100	0	0	400.00	SF	10.00	10.00	100	2022	2023		100	4,000	

LAND DESCRIPTION

TOTAL OB/XF 12,830

LN	USE CODE	CLS	LAND USE DESCRIPTION	CAP	RD	LOC ZONE	FRONT	DEPTH	TOT LND UTS	UNIT TYPE	DT	DPTH FACT	% COND	TOT ADJ	UNIT PRICE	ADJ UNIT PRICE	LAND VALUE	OTHER ADJUSTMENTS AND NOTES	YEAR	DENSITY	DECL	FRZ	YR	CONSRV
1	000100	C	SFR	100		RS-1	0.00	0.00	1.00	LT		1.00	1.00	1.00	450,000.00	450,000.00	450,000							

REVIEW DATE 01/10/2017 BY DJ Total Acres: 0.00 Total Land Value: 450,000 Market: 0 Agricultural: 0 Common: 450,000 PRINTED 08/02/2023 BY SYS