LOT 11
BEACH WALKER VILLAGE PB 4/14

BOYD DONALD L & SUSAN P L/E/
30 BEACH WALKER ROAD
FERNANDINA BEACH, FL 32034

2023

01-6N-29-0200-0011-0000

NASSAU COUNTY PROPERTY

BUILDING CHARACTERISTICS

ELEMENT	CD	CONSTRUCTION
Exterior Wall	16	WD FR STUC 100
Roof Structur	08	IRREGULAR 100
Roof Cover	03	COMP SHNGL 100
Interior Wall	05	DRYWALL 100
Interior Floo	12	HARDWOOD 100
Air Condition	03	CENTRAL 100
Heating Type	04	AIR DUCTED 100
Bedrooms		4 100
Bathrooms		4 100
Frame	02	WOOD FRAME 100
Stories	2.	2. 100
Units		0 100
Quality	05	Quality Level 05

DOR CODE 0100 SINGLE FAMILY
MAP NUM | MKT AREA 10
NEIGHBORHOOD/LOC 10001.00

AREA TYPE	TOTAL GROSS AREA	PCT OF BASE	TOT ADJ AREA	SUBAREA MARKET VALUE
BAS	2,768	100	2,768	519,677
FGR	638	55	351	65,899
FOP	86	30	26	4,882
FOP	104	30	31	5,820
FOP	185	30	56	10,514
FST	80	55	44	8,261
FUS	377	100	377	70,779
STR	40	10	4	751
UOP	59	20	12	2,253
UOP	217	20	43	8,073
TOTALS	5,253		3,852	723,192

MARKET ADJUSTMENTS

TYPE	MDL	EFF. AREA	TOT ADJ PTS	EFF. BASE RATE	REPL. COST NEW	AYB	EYB	ECON	FNCT		NORM	% COND
0500	11	3,852	143.2080	204.07	786,078	2006	2006	0	0	0	8.00	92.00

1 SFR CUST - 100% - 2009 Heated Area: 3145 HX Base Yr 2009

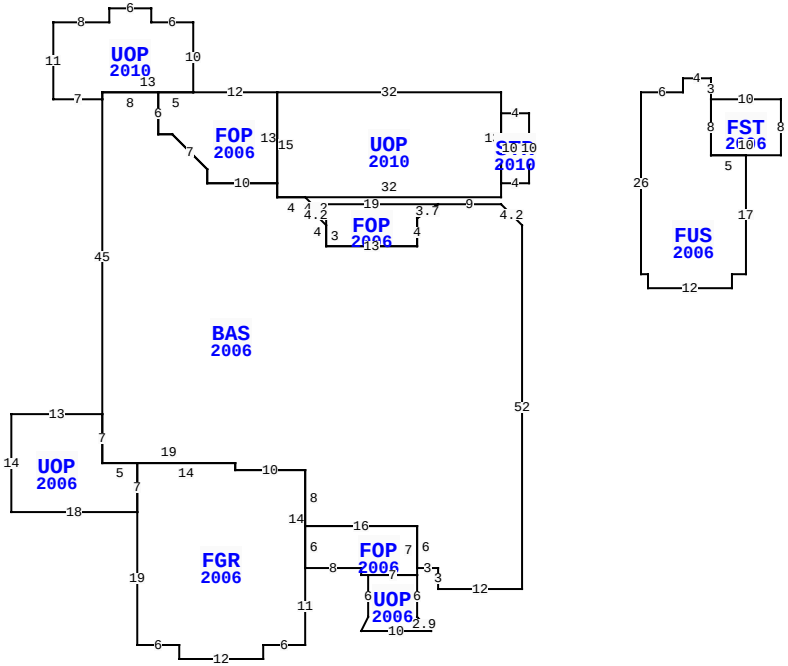

** This building has 12 Sub-Areas

30 BEACH WALKER RD, FERNANDINA BEACH

BLD DATE	11/08/2007 KK	LGL DATE	
XF DATE		LAND DATE	
INC DATE		AG DATE	

VALUATION SUMMARY

VALUATION BY		STANDARD
Tax Group: 5	Tax Dist:	
BUILDING MARKET VALUE		723,192
TOTAL MARKET OB/XF VALUE		55,365
TOTAL LAND VALUE - MARKET		600,000
TOTAL MARKET VALUE		1,378,557
SOH/AGL Deduction		652,446
ASSESSED VALUE		726,111
TOTAL EXEMPTION VALUE	HX HB	50,000
BASE TAXABLE VALUE		676,111
TOTAL JUST VALUE		1,378,557
NCON VALUE		0
INCOME VALUE		
PREVIOUS YEAR MKT VALUE		869,437

PERMIT NUM	DESCRIPTION	AMT	ISSUED
B22997	XFOB	10,566	11/01/2009
M10295	MECH OTHER	0	09/01/2005
E15436	ELEC OTHER	2,000	08/01/2005
P09773	OTHER	0	08/01/2005
C0515430	CO ISSUED	327,000	06/01/2005
R0507769	REPAIR/RRF	3,000	06/01/2005

SALES DATA

OFF RECORD Number	DATE	TYPE INST	Q / U	V / I	RSN CD	SALE PRICE
2282/0161	6/12/2019	LE	U	I	11	100
GRANTOR: BOYD DONALD L & SUSAN						
GRANTEE: BOYD MARSHALL L						
1597/0163	12/12/2008	TD	U	I	01	100
GRANTOR: BOYD SUSAN P TRUSTEE						
GRANTEE: BOYD DONALD L & SUS						

BUILDING NOTES

BUILDING DIMENSIONS

UOP=[YR=2010] W32 FOP=[YR=2006] W12 UOP=[YR=2010] N10 W6 N2 W6 S2 W8 S11 E7 BAS=[YR=2006] S45 UOP=[YR=2006] W13S14 E18FGR=[YR=2006] S19E6S2E12N2E6N11 FOP=[YR=2006] E8S1E1UOP=[YR=2006] S6 D2 L1 E10 U2 L2 N6W7$E7N7W16S6$N14W10 N1W14S7$N7W5N7$S7E19S1E10S8E16 S6E3S3E12N52 U3 L3 W9 FOP=[YR=2006] W19 D3 R3 S3 E13 N4 U2 R3 $ D2 L3 S4 W13 N4 U3 L3 W4 N2 W10 N2 U5 L5 W2 N6W8 S1$ N1 E13$ W5 S6 E2 D5 R5 S2 E10 N13$ S15 E32 N2 STR=[YR=2010] E4N10W4S10 $ N13$ PTR=[YR=2006] E20 FUS=[YR=2006] E6 N2E4S3FST=[YR=2006] E10S8W10N8$S8E5 S17W2S2W12N2W1N26$W20$.

EXTRA FEATURES

LN	OB/XF CODE	DESCRIPTION	BLD	CAP	L	W	UNITS	UT	Adj R	ADJ UNIT PRICE	ORIG COND	YEAR ON	YEAR ACTUAL	Q	% COND	OB/XF MKT VALUE	NOTES
1	0855	CONC PAVER	0	100	0	0	1,728.00	SF	10.00	10.00	100	2006	2006	3	88	15,206	
2	0855	CONC PAVER	0	100	0	0	197.00	SF	10.00	10.00	100	2006	2006	3	88	1,734	
3	0861	POOL GUNIT	0	100	0	0	414.00	SF	85.00	85.00	100	2010	2010	3	64	22,522	
4	0911	SCRN RM A	0	100	0	0	502.00	SF	35.00	35.00	100	2010	2010	3	50	8,785	
5	0855	CONC PAVER	0	100	0	0	502.00	SF	10.00	10.00	100	2010	2010	3	92	4,618	
6	0600	SUMMER KIT	0	100	0	0	1.00	UT	5,000.00	5,000.00	100	2010	2010	3	50	2,500	

LAND DESCRIPTION

TOTAL OB/XF 55,365

LN	USE CODE	CLS	LAND USE DESCRIPTION	CAP	RD	LOC ZONE	FRONT	DEPTH	TOT LND UTS	UNIT TYPE	DT	DPTH FACT	% COND	TOT ADJ	UNIT PRICE	ADJ UNIT PRICE	LAND VALUE	OTHER ADJUSTMENTS AND NOTES	YEAR	DENSITY	DECL	FRZ	YR	CONSRV
1	000140	C	SFR GOLF A	100	0003	RS-1	0.00	0.00	1.00	LT		1.00	1.00	1.00	600,000.00	600,000.00	600,000							

REVIEW DATE 04/21/2020 BY DJA Total Acres: 0.00 Total Land Value: 600,000 Market: 0 Agricultural: 0 Common: 600,000 PRINTED 08/02/2023 BY SYS