LOT 4
IN OR 1844/937
BEACH WALKER VILALGE PB 4/14

CASEY THOMAS J & SHERENE M
16 BEACH WALKER RD
FERNANDINA BEACH, FL 32034

2023

01-6N-29-0200-0004-0000

NASSAU COUNTY PROPERTY

BUILDING CHARACTERISTICS

ELEMENT	CD	CONSTRUCTION
Exterior Wall	16	WD FR STUC 100
Roof Structur	08	IRREGULAR 100
Roof Cover	03	COMP SHNGL 100
Interior Wall	05	DRYWALL 100
Interior Floo	12	HARDWOOD 80
Interior Floo	11	CLAY TILE 20
Air Condition	03	CENTRAL 100
Heating Type	04	AIR DUCTED 100
Bedrooms		3 100
Bathrooms		3.5 100
Frame	02	WOOD FRAME 100
Stories	1.	1. 100
Units		0 100
Quality	04	Quality Level 04

DOR CODE	0100	SINGLE FAMILY	
MAP NUM		MKT AREA	10
NEIGHBORHOOD/LOC	10001.00		

AREA TYPE	TOTAL GROSS AREA	PCT OF BASE	TOT ADJ AREA	SUBAREA MARKET VALUE
BAS	3,092	100	3,092	592,861
FGR	714	55	393	75,353
FOP	144	30	43	8,244
FOP	152	30	46	8,820
FSP	434	40	174	33,363
FST	618	55	340	65,191
STP	40	10	4	767
USP	88	30	26	4,985
TOTALS	5,282		4,118	789,586

MARKET ADJUSTMENTS

TYPE	MDL	EFF. AREA	TOT ADJ PTS	EFF. BASE RATE	REPL. COST NEW	AYB	EYB	ECON	FNCT		NORM	% COND
0500	11	4,118	136.6042	194.66	801,610	2019	2019	0	0	0	1.50	98.50

1 SFR CUST - 100% - 2020 Heated Area: 3092 HX Base Yr 2020

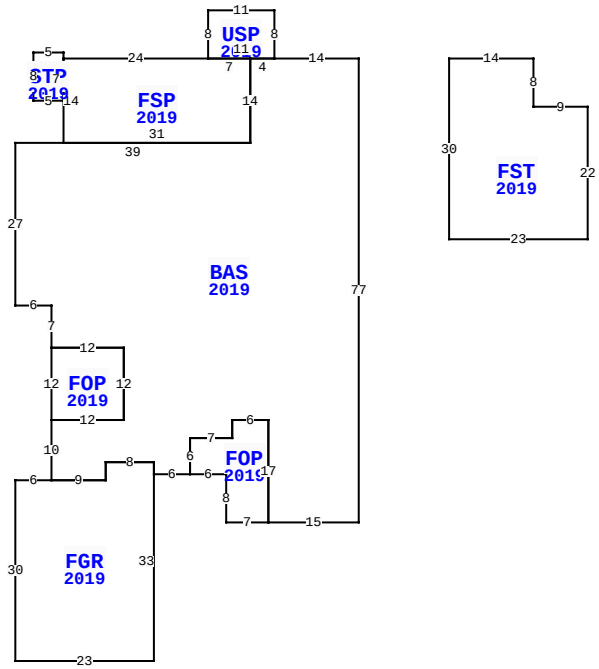

16 BEACH WALKER RD, FERNANDINA BEACH

BLD DATE		LGL DATE	
XF DATE		LAND DATE	
INC DATE		AG DATE	

VALUATION SUMMARY

VALUATION BY		STANDARD
Tax Group: 5	Tax Dist:	
BUILDING MARKET VALUE		789,586
TOTAL MARKET OB/XF VALUE		26,443
TOTAL LAND VALUE - MARKET		600,000
TOTAL MARKET VALUE		1,416,029
SOH/AGL Deduction		574,263
ASSESSED VALUE		841,766
TOTAL EXEMPTION VALUE	HX HB	50,000
BASE TAXABLE VALUE		791,766
TOTAL JUST VALUE		1,416,029
NCON VALUE		0
INCOME VALUE		
PREVIOUS YEAR MKT VALUE		999,577

PERMIT NUM	DESCRIPTION	AMT	ISSUED
B180496	NEW CONSTR	420,976	01/17/2018

SALES DATA

OFF RECORD Number	DATE	TYPE INST	Q U	V I	RSN CD	SALE PRICE
1844/0937	3/08/2013	WD	Q	V	01	285,000
GRANTOR: CLARKSON THOMAS R & P						
GRANTEE: CASEY THOMAS J & SH						
0811/0672	10/27/1997	WD	Q	V		90,000
GRANTOR: BAUMAN RICHARD A						
GRANTEE: CLARKSON THOMAS R &						

BUILDING NOTES

BUILDING DIMENSIONS

BAS=[YR=2019] W14 USP=[YR=2019] N8 W11 S8 FSP=[YR=2019] W24
STP=[YR=2019] N1 W5 S8 E5 N7$ S14 E31 N14 W7$ E11$ W4 S14 W39
S27 E6 S7 FOP=[YR=2019] S12 E12 N12 W12$ E12 S12 W12 S10
FGR=[YR=2019] W6 S30 E23 N33 W8 S3 W9$ E9 N3 E8 S2 E6
FOP=[YR=2019] E6 S8 E7 N17 W6 S3 W7 S6$ N6 E7 N3 E6 S17 E15
N77$ PTR=E15 FST=[YR=2019] E14 S8 E9 S22 W23 N30$ W15$.

EXTRA FEATURES

LN	OB/XF CODE	DESCRIPTION	BLD	CAP	L	W	UNITS	UT	Adj R	ADJ UNIT PRICE	ORIG COND	YEAR ON	YEAR ACTUAL	Q	% COND	OB/XF MKT VALUE	NOTES
1	0500	FP-PRE FAB	0	100	0	0	1.00	UT	3,500.00	3,500.00	100	2019	2019	3	99	3,465	
2	0855	CONC PAVER	0	100	0	0	1,843.00	SF	10.00	10.00	100	2019	2019	3	99	18,246	
3	0855	CONC PAVER	0	100	0	0	478.00	SF	10.00	10.00	100	2019	2019	3	99	4,732	

LAND DESCRIPTION

TOTAL OB/XF 26,443

LN	USE CODE	CLS	LAND USE DESCRIPTION	CAP	RD	LOC ZONE	FRONT	DEPTH	TOT LND UTS	UNIT TYPE	DT	DPTH FACT	% COND	TOT ADJ	UNIT PRICE	ADJ UNIT PRICE	LAND VALUE	OTHER ADJUSTMENTS AND NOTES	YEAR	DENSITY	DECL	FRZ	YR	CONSRV
1	000140	C	SFR GOLF A	100		RS-1	0.00	0.00	1.00	LT		1.00	1.00	1.00	600,000.00	600,000.00	600,000							

REVIEW DATE 07/31/2019 BY DJ Total Acres: 0.00 Total Land Value: 600,000 Market: 0 Agricultural: 0 Common: 600,000 PRINTED 08/02/2023 BY SYS