LOT 71
IN OR 2052/1123
ESMT PT OR 1449/843

ALFORD JARROD R
3285 DEERE DR
PETOSKEY, MI 49770

2023

01-2N-27-1270-0071-0000

BUILDING CHARACTERISTICS

ELEMENT	CD	CONSTRUCTION
Exterior Wall	10	ABOVE AVG 80
Exterior Wall	16	WD FR STUC 20
Roof Structur	03	GABLE/HIP 100
Roof Cover	03	COMP SHNGL 100
Interior Wall	05	DRYWALL 100
Interior Floo	14	CARPET 70
Interior Floo	11	CLAY TILE 30
Air Condition	03	CENTRAL 100
Heating Type	04	AIR DUCTED 100
Bedrooms		3 100
Bathrooms		2 100
Frame	02	WOOD FRAME 100
Stories	1.	1. 100
Units		0 100
Occupancy	00	NONE 100
Quality	02	Quality Level 02
DOR CODE	0100	SINGLE FAMILY
MAP NUM		MKT AREA 04
NEIGHBORHOOD/LOC	4044.00	

AREA TYPE	TOTAL GROSS AREA	PCT OF BASE	TOT ADJ AREA	SUBAREA MARKET VALUE
BAS	1,628	100	1,628	185,731
FEP	234	80	187	21,334
FGR	440	55	242	27,608
FOP	227	30	68	7,758
TOTALS	2,529		2,125	242,431

MARKET ADJUSTMENTS

TYPE	MDL	EFF. AREA	TOT ADJ PTS	EFF. BASE RATE	REPL. COST NEW	AYB	EYB	ECON	FNCT		NORM	% COND
0900	01	2,125	105.1099	124.82	265,242	2004	2004	0	0	0	8.60	91.40

1 SNGL FAM – 0% - 0 Heated Area: 1628 HX Base Yr

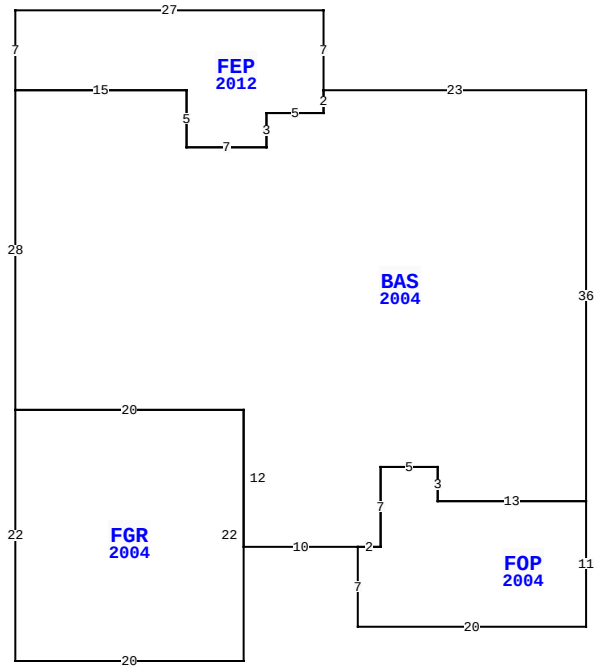

BLD DATE	03/03/2023 NW
XF DATE	
INC DATE	
LGL DATE	
LAND DATE	
AG DATE	

96013 WATERS CT, FERNANDINA BEACH

NASSAU COUNTY PROPERTY

PAGE 1 of 1 4

VALUATION SUMMARY

VALUATION BY	STANDARD
Tax Group: 4	Tax Dist:
BUILDING MARKET VALUE	242,431
TOTAL MARKET OB/XF VALUE	7,218
TOTAL LAND VALUE - MARKET	65,000
TOTAL MARKET VALUE	314,649
SOH/AGL Deduction	73,762
ASSESSED VALUE	240,887
TOTAL EXEMPTION VALUE	0
BASE TAXABLE VALUE	240,887
TOTAL JUST VALUE	314,649
NCON VALUE	0
INCOME VALUE	
PREVIOUS YEAR MKT VALUE	252,599

PERMIT NUM	DESCRIPTION	AMT	ISSUED
B0412458	NEW CONSTR	175,000	03/01/2004

SALES DATA

OFF RECORD Number	DATE	TYPE INST	Q U	V I	RSN CD	SALE PRICE
2052/1123	6/09/2016	SW	Q	I	02	181,300
GRANTOR: FANNIE MAE						
GRANTEE: ALFORD JARROD R						
2020/0925	12/28/2015	CT	U	I	18	100
GRANTOR: CLERK OF COURT						
GRANTEE: FEDERAL NATIONAL MO						

BUILDING NOTES

BUILDING DIMENSIONS

BAS=[YR=2004] W23 FEP=[YR=2012] N7 W27 S7 E15 S5 E7 N3 E5 N2 $ S2 W5 S3 W7 N5 W15 S28 FGR=[YR=2004] S22 E20 N22 W20 $ E20 S12 E10 FOP=[YR=2004] S7 E20 N11 W13 N3 W5 S7 W2$ E2 N7 E5 S3 E13 N36$.

EXTRA FEATURES

LN	OB/XF CODE	DESCRIPTION	BLD	CAP	L	W	UNITS	UT	Adj R	ADJ UNIT PRICE	ORIG COND	YEAR ON	YEAR ACTUAL	Q	% COND	OB/XF MKT VALUE	NOTES
1	0500	FP-PRE FAB	0	0	0	0	1.00	UT	3,500.00	3,500.00	100	2004	2004	3	89	3,115	
2	0855	CONC PAVER	0	0	0	0	63.00	SF	10.00	10.00	100	2004	2004	3	86	542	
3	0811	CONCRETE B	0	0	0	0	568.00	SF	5.20	5.20	100	2004	2004	3	86	2,540	
4	0858	SCULP CONC	0	0	9	9	81.00	SF	13.00	13.00	100	2006	2006	3	97	1,021	

LAND DESCRIPTION

TOTAL OB/XF 7,218

LN	USE CODE	CLS	LAND USE DESCRIPTION	CAP	RD	LOC ZONE	FRONT	DEPTH	TOT LND UTS	UNIT TYPE	DT	DPTH FACT	% COND	TOT ADJ	UNIT PRICE	ADJ UNIT PRICE	LAND VALUE	OTHER ADJUSTMENTS AND NOTES	YEAR	DENSITY	DECL	FRZ	YR	CONSRV
1	000100	C	SFR	0	0003		0.00	0.00	1.00	LT		1.00	1.00	1.00	65,000.00	65,000.00	65,000							

REVIEW DATE 10/15/2018 BY DJX Total Acres: 0.00 Total Land Value: 65,000 Market: 0 Agricultural: 0 Common: 65,000 PRINTED 08/02/2023 BY SYS